McMaster University
DigitalCommons@McMaster

EE 4BI6 Electrical Engineering Biomedical Capstones

Department of Electrical and Computer Engineering

3-27-2009

Design of a Bionic Hand Using Non- Invasive Interface

Christopher Kidd
McMaster University

Follow this and additional works at: http://digitalcommons.mcmaster.ca/ee4bi6

Part of the Biomedical Commons

Recommended Citation
Kidd, Christopher, "Design of a Bionic Hand Using Non- Invasive Interface" (2009). *EE 4BI6 Electrical Engineering Biomedical Capstones.* Paper 9.
http://digitalcommons.mcmaster.ca/ee4bi6/9

This Capstone is brought to you for free and open access by the Department of Electrical and Computer Engineering at DigitalCommons@McMaster. It has been accepted for inclusion in EE 4BI6 Electrical Engineering Biomedical Capstones by an authorized administrator of DigitalCommons@McMaster. For more information, please contact scom@mcmaster.ca.

Design of a Bionic Hand Using Non-Invasive Interface

By

Christopher Kidd

Electrical And Biomedical Engineering Design Project (4BI6)

Department of Electrical and Computer Engineering

McMaster University

Hamilton, Ontario, Canada

Design of a Bionic Hand Using Non-Invasive Interface

By

Christopher Kidd

Electrical and Biomedical Engineering

Faculty Advisor: Prof. Doyle

Electrical and Biomedical Engineering Project Report

submitted in partial fulfillment of the degree of

Bachelor of Engineering

McMaster University

Hamilton, Ontario, Canada

March 27, 2009

Abstract

The Non-Invasive Bionic Hand was a prosthetic developed for those who are unfortunate enough to have lost a hand. The purpose of the design was to create a robotic hand that could be easily controlled by the user in order to improve their quality of life. In this case, the user would wear a glove on their remaining hand which they then could control the mechanical hand via a four-bit system, where the bits can be selected by flexing their fingers to enable hall effect sensors. A feedback system has been designed to allow the user to sense two states of fingertip pressure. The prototype was constructed with the use of Meccano for the frame, as well as motors to generate finger motion. Signal extraction from the user occurs by utilizing hall effect sensors, proceeded as desired in order to obtain clear, distinct signals to select the various hand positions. Tests have shown that movement of the prosthetic is inconsistent however responds well to user input. While the Meccano prosthetic is impractical for real world application, the design has successfully demonstrated the concept as a whole. With proper materials to construct the prosthetic, in concurrence with lowering the power consumption, the Bionic Hand could be distributed for public use. In this dissertation, the material will be focusing on the mechanical prosthetic itself, along with the glove portion of the device. The theory behind our device, hardware design, and the experimental results are presented.

Key words: hand prosthetic, non-invasive, Meccano, hall effect, bionic hand, glove, binary system

Acknowledgements

This exposition could not have been written without Dr. Doyle who not only served as a supervisor but endowed encouragement and challenges throughout the academic program. He and the other faculty members, Dr. Sirouspour and Dr. Patriciu, provided guidance through the dissertation process, never accepting less than the best of efforts.

Of course, recognition needs to be given to Jason Thong, the teaching assistant for the program, who's challenging questions led the group to analyze the problems of the device in excruciating detail, and who's advice in the lab were critical to the development of the Bionic Hand.

Thirdly, acknowledgements need to be extended to the students of the 4BI6 Biomedical Capstone course, who all gave advice on how to accomplish various portions of the device and helped to share in the designing process as a whole.

Finally, the entirety of the project would not have been completed without the constant support and work ethic of my fellow project collaborator Evan McNabb. The development of the Bionic Hand was the work of a full academic year's worth of cooperation and hard labor, and together the objectives we set out to achieve were realized.

Thank you all.

Contents

Abstract . . . . . **iii**

Acknowledgements . . . . . **iv**

Contents . . . . . **v**

List of Tables . . . . . **viii**

List of Figures . . . . . **ix**

1 Introduction **1**

1.1 Background 1

1.2 Objectives 4

1.3 General Approach to the Problem 5

1.4 Scope of the Project 6

2 Literature Review **7**

2.1 Body-Powered Prostheses 7

2.2 Electric Prostheses 9

3 Statement of Problem **14**

3.1 Overview 14

3.2 User Interface 15

3.3 Input Regulator 16

3.4 Prosthetic – Muscle Wire 18

3.5 Prosthetic – Motors 20

3.6 Prosthetic – Socket/Attachment 23

4 Experimental or Design Procedures 24

4.1 Design of a Control Glove 24

4.2 Design of an Input Regulator 27

4.3 Design of a Prosthetic using Muscle Wire 28

4.4 Design of a Prosthetic using Motors 30

4.5 Design of an Attachment Mechanism 38

4.6 Operation of the Device 39

5 Results and Discussion 41

5.1 Results of a Control Glove 41

5.2 Results of an Input Regulator 43

5.3 Results of the Muscle Wire 44

5.4 Results of a Prosthetic using Motors 45

5.5 General Discussion 46

6 Conclusions and Recommendations 49

Appendix A: 51

References 52

Vitae 53

List of Tables

4.1 Resistor Values for the Input Regulator ……27

4.2 Muscle Wire Attribute Table …….28

List of Figures

2.1 Body Powered Prosthetic ……..……8

2.2 Electric Powered Arm ……..……11

2.3 Electric Powered Hand…….……....12

3.1 Overall Flow Diagram …….……15

3.2 Hall Effect …….……...16

3.3 Shape Memory Alloy…….……...19

3.4 DC Motor System ……21

3.5 Servo Motor Pulse Sequence ……...22

4.1 Preliminary Glove Design ……25

4.2 Final Glove Design ……..26

4.3 Input regulator ……..27

4.4 Finger Design ……...31

4.5 Upgraded Finger Design ……..32

4.6 End Effecter Design …….33

4.7 Two Way Control Axle …….35

4.8 Final Robotic Arm ……36

5.1 Input Regulator Voltage Graph …….43

5.2 End Effecter Positions ……..45

5.3 Open Position with Error ……..47

Chapter 1

Introduction

1.1 Background

In general, artificial limbs are a form of prosthesis which takes the place of missing extremities. The type of prosthesis used is principally dependant upon the extent of the amputation, and the location of the missing extremity. They can be required for a multitude of reasons, including disease, accidents, and congenital defects, such as when a person is born with a missing or damaged limb. Accidents ranging from industrial, vehicular, or war related incidents are the most common cause for amputations in larger portions of Africa. Whereas diseases, most often cancerous tissue or circulatory disease, are the typical reasons for amputations in North America and Europe.
Artificial limbs date back to the 19th century where they started to become highly widespread due to the significant numbers of amputees from the Napoleonic Wars and the American Civil War. Prosthetic technology quickly improved for a number of reasons. First was the amount of funding given to researching in the area, and secondly was the discovery and usage of anesthetics. In more modern times, a significant amount of effort has been spent on creating prosthetic limbs that are more mobile, and more aesthetically pleasing to the eye. Progress made in several fields including biomechanics, plastics, and computer aided design have all helped to contribute to the prosthetics that we use today.

Currently, there are a number of artificial limbs that perform any number of possible functions. The most commonly employed prostheses are transtibial, transfemoral, transradial, and transhumeral. New plastics, and materials such as carbon fiber, have enabled the advancement seen in today's artificial limbs. Using these

innovative materials, prostheses can be much stronger, while at the same time being much lighter for the user to wear the prosthetic. Also, the materials allow designers to create realistic looking artificial limbs, which is important for patient comfort, especially those whose prosthetics are prone to be seen.

Along with the development of new materials, also the advancement in electrical technology has aided in the implementation of common artificial limbs, specifically transradial and transhumeral limbs. By measuring electromyography (EMG) signals, limb control can be obtained by converting the received signals into movement of the limb. This allows the amputee to manipulate the hand directly simply by flexing muscles.

Frequently, modern limbs employ the stump to socket method to attach the limb to the prosthetic, via belts and cuffs, or by suction. To do so, the stump is custom made, by taking a plastic mold of the stump, to the given patient so as to create a better fit between the patient and the prosthetic in order to lower the level of wear on the stump on the patient. Making the socket fit as closely as possible limits the wear on the patient, and thus lowers the chances for pain and damage of tissue. However, this is not the only method of attaching the prosthetic to the user. Affixing the prosthetic directly to the bone of the patient is a new tactic being employed. A surgeon inserts a bolt into the bone at the end of the stump, then after months of healing, the bone itself is attached to the bolt. Thus, the prosthetic is then connected to the bolt which avoids the painful negative aspects of the socket to stump method.

The Bionic Hand Using Non Invasive Interface is a project aimed at delivering motor control and sensory feedback to individuals who have lost an arm, thus creating a transradial prosthetic. This project is a combination of electrical and mechanical systems which are user controlled, whereby the electrical systems are there to receive inputs from physical controls and drive the mechanical system. The mechanical system is the device that provides the output to the user, but also sends feedback dependant on the level of pressure the device is currently experiencing back to the electrical system. Together the two give the bionic hand that has been the basis of our work for the past eight months. Since this was a joint project it was decided to split the tasks between myself and my partner, Evan McNabb. The project was split so that all things concerning the programming and feedback would be my partner’s area of focus, while all things

concerning the construction of the mechanical prosthetic and the control glove were to be my portion. The project was developed in such a way that gave me the opportunity to work on the following tasks: research and develop methods to receive user input, and convert the desired movement to electrical signals, and design a mechanical transradial prosthetic that could perform a multitude of hand positions.

The purpose of the Bionic Hand is quite simple: to improve the quality of life for those missing a single arm. The design was created to allow a given person to perform simple daily activities that require two hands they would otherwise be unable to complete. Such activities include driving with one hand while being able to turn the radio on, or eating using both hands so one can hold both a knife and fork at the same time. The user, by employing the Bionic Hand, will be able to move boxes or go lift weights at the gym. There are any number of things a patient could do with the implementation of the Bionic Hand, while having little to no training on how to use the device. The human hand has twenty-two degrees of freedom, and while the method demonstrated in this paper only has three, there are a number of positions the prosthetic can make allowing for various hand functions.

The majority of current arm prostheses have some form of invasive nature on the patient. For example, myoeletric arms require the placement of electrodes on the surface of the arm to measure EMG signals, and body-powered harnesses constrict the body, thus causing patient discomfort. Another significant reason behind the method described in this paper is to make it as minimally invasive as possible, therefore the design of the hand was aimed to diminish the level of discomfort the given patient has. Thus, our design eliminates the need for a cumbersome harness, as well as the requirement to have electrodes placed on the patient.

This chapter will provide a description, objectives, and approach to the problem as a whole as well as the individual work that will be presented throughout the rest of the report. Giving a complete description of the project's objectives, general approach and scope is necessary in the development of each of parts that were individually worked on. The remaining chapters give a literature review for all the theoretical developments and design choices, a problem statement that deals with my individual contribution to the project, design procedures on how the work was designed and completed, and finally

results and conclusions, whereby this chapter will compare and contrast the observations of the project with the objectives that are presented in the next section along with further elaborations throughout the dissertation.

1.2 Objectives

The objectives of this project are to give the user motor control and sensory feedback information using a simple non invasive interface method. The method described in this dissertation seeks to create an easily exercised, non-invasive technique for a patient to move an artificial arm. The design of the Bionic Hand is desired to maximize portability and functionality, whereby the method allows for the user to wear the Bionic Hand only when they desire to use it. In order to fashion the ease of use, the group had to come up with a design that enabled the user full control, while still being very simple. As such, for this method the user wears a control glove that reads input from flexion of the user's fingers. Two fingers are used as a binary positional system, so there is a possible of $2^2 = 4$ hand combinations. The flexing of the user's fingers must be interpreted by the electrical system, and then passed on to the mechanical prosthetic to force the hand to contract or extend depending upon the signal.

Finally, the last objective of this project is to develop a feedback sensory loop so as the user has an idea of how much pressure the hand is exerting on an object, or how hard a finger is pushing. This is incredibly significant towards the overall quality of product as it is important for a user to have this sensory information. The feedback signal allows the user to advance passed your typical physical interaction with the world, but to intuitively understand their own interaction with the world, and as such be able to make fine tuning alterations to the hand position.

As this a very qualitative project, there fails to exist any significant quantitative measurements describing what the method is trying to achieve. Thus, objectives for the project are set as the capacity of the user to employ the glove hand to manipulate the robotic arm, the ability of the arm to functionally perform the four predetermined, desired hand movements, and the capability of the feedback system to be interpreted correctly by the user. Specific work to this project includes the creation of a user friendly glove, along with a robotic hand. In particular for these two portions of the project, goals were set to

develop a glove that would not be overly cumbersome to the user so as to not detract from the capabilities of the user's good hand. In terms of the robotic hand itself, the objective is to design and implement a prosthetic that would emulate the forearm of a human. Thus, to create a prosthetic that could receive the inputs from the electrical system, be lightweight enough for the user to be comfortable using, yet still have enough power to grip items with enough force.

1.3 General Approach to the Problem

The project is broken down into a number of building blocks that include: signal extraction from the control hand; input regulation; microcontroller; output amplification; bionic hand; and feedback. The method implements the development of each of these components so that they can be worked on and tested independently without any of the other components interfering. Naturally, for the project to work properly, all of the components must function cohesively to accomplish the desired final results. The work presented in this report include: extraction from the control hand, and the robotic prosthetic.

The user flexes their control hand, and thus signals are sent out to the input regulator to ensure that proper voltage signals are sent to the microcontroller. The microcontroller is the hub of the project, whereby we have information coming from the user to the microcontroller, from the controller to the hand, and from the hand back to the microcontroller. Thus, by using this input regulator we ensure that the voltages coming from the user are always within the safe voltage range. After receiving the signal from the user, the microcontroller must then interpret the information, and then output the corresponding hand position out to the prosthetic. For the motors of the prosthetic to move properly, there has to be an amplification of the current after the microcontroller so as to have enough power to drive the motors. Finally, feedback from pressure sensors on the tips of the prosthetic fingers must return to the microcontroller so the user can experience information regarding the pressure and grasp of the bionic hand.

1.4 Scope of the Project

Anything from simple movements of a joint, to a multifaceted compilation of events can make up the motor function of the hand, as such the main purpose of this project is to restore these motor functions. Sensory feedback from human hands to the brain contains information about a number of senses, including temperature, motion, pressure, and proprioception. Such feedback information is difficult to return to the user without applying some form of non-invasive method. As such, the Bionic Hand is designed to convey straightforward results that the user may employ to aid in day-to-day activities. For the prosthetic hand, a triad of fingers are set up to make a claw like structure, with two fingers facing and opposing third middle finger. For the patient, it was found that simple activities such a grasping objects, pointing to push buttons, and holding items were the most important for such an endeavour. The ultimate goal is to be able to fully control the fingers, via flexion and extension of the prosthetic joints to move the Bionic Hand to four positions: the open position, grasp, point, and finally pinch.

In order to restore sensory feedback to the patient, there are any number of approaches, however the simplest way to receive the information is through the implementation of sensors. Pressure sensors are required for the user interpret the amount of force they are applying to a given object when holding or grasping something, accelerometers can be used to measure the amount of movement of the end effecter, and finally temperature can be found as well. For this project, pressure thresholds will be predetermined, and once said levels are reached, will be output to the user visually using light intensity. This method is an uncomplicated method to relate to the user a the level of pressure they are applying to a given object.

Chapter 2

Literature Review

Within this chapter, an analysis will be completed to examine the work being done on the creation of prosthetic arms. There are two main types of transradial functional prostheses, both of which will be dissected in this critique, cable operated prostheses, and myoeletric prostheses. Cable operated prostheses are generally supported by harnesses, and are employed via a cable that loops around the opposite shoulder. This cable then controls the opening and closing of the prosthetic simply by having the user raise or lower their shoulder. Myoeletric prostheses are those which are controlled electrically by measuring EMG pulses. The pulses are produced via the flexing of larger upper arm muscles such as the biceps or triceps. The methods for receiving these signals varies given the level of technical advancement on the given prosthetic, whether it be simple surface electrodes to detect the EMG waves, or reinnervation techniques. There are also activity-specific hand prostheses, designed for the use in only particular instances where the two previously discussed types of prostheses would be otherwise limiting. These devices exist for a wide range of activities, typically recreational in nature, such as fishing, weight lifting, golfing, and a number of other actions.

2.1 Cable Operated Prostheses

Body powered prostheses, more commonly termed conventional prostheses, are powered and manipulated by significant muscle deviations. Typically employing the shoulder, chest, or upper arm for the large movements, they are attached to a harness system, which in turn is connected to a cable running to the end effecter device, generally a hook, or hand model. Depending on the level of amputation, elbow systems could be added to the control system for augmented patient function. In order to qualify for the use

of this device, there are a number of necessities a candidate must have. The patient must be able to perform one of the following gross body movements:

- Glenohumeral flexion
- Scapular abduction or adduction
- Shoulder depression and elevation
- Chest expansion

Additionally, a patient must possess the following characteristics:

- Sufficient residual limb length
- Sufficient musculature

Figure 2.1: Picture depicting a body-powered arm prosthetic

There are many benefits to employment of conventional prostheses. First and foremost, the simplicity of the design allows for the prosthetic to be highly strong, and resistant to wear and tear. Due to the materials used in the construct, these devices can also be used in environments that would otherwise be potentially dangerous to the prosthetic, and allow the user to manipulate items that engross water or dust like substances. There is the added advantage that commonly patients who utilize this device find themselves having increased levels of command of the device due to higher levels of proprioception over other techniques. Proprioception being the phenomenon humans experience allowing them to sense the relative position of parts of the body to one

another, as well as the sense which provides feedback providing details of whether the body is in movement. As discussed previously, the design of the prosthetic is incredibly simple, as such this makes repairs of the device very undemanding, and the overall cost of the device is relatively cheap in comparison to its myoeletric counterparts.

However, as discussed previously, there are many other qualities of prosthetic devices that must be taken into account. With cable operated prostheses, the users of this type of device frequently describe the device as uncomfortable, with a strong feeling of restrictiveness due to the control harness. New materials have been developed to alleviate the level of tension on the body, however the harness is required to be tight enough to detect and employ the movement of the given body part to control the hand. Also, due to this tightness the harness can restrict the mobility of the user, which can be a significant negative impact on the patient.

2.2Electric Prostheses

In general, electric prostheses employ the use of small electrical motors to offer hand movement control. Depending on the style of prosthetic, the motors can be placed in the end effecter, wrist, or elbow, and in order to power the motors themselves, rechargeable batteries are employed to provide constant power. There are numerous methods to manipulate electric prostheses, including myoeletric control, Servo control, linear potentiometers, force sensors, button control, and harness switch control. Classically, a combination of these methods is utilized to provide augmented control.

The battery system of electric systems requires a significant amount of preservation. Everything from charging, discharging, disposal, and replacement are all portions of the maintenance that are associated with electric prostheses. Due to the parts required to construct an electrical prosthetic, they tend to be significantly heavier, thus more cumbersome on the patient. Some suspension techniques have been attempted to decrease the level of weight of the hand on the patient.

In comparison to the conventional hand prostheses, electric devices eliminate the need for the constricting harness. Though in some hybrid cases, electric devices may

employ the use of body powered devices to act as a switch for the input control of the prosthetic. Myoelectric prostheses, similar to body powered prostheses, require a training period for the patient to become accustomed to the control of the hand. Both methods require the patient to be able to independently control various muscles of the body to perform various end effecter actions.

Electric prostheses, when properly fit, require very little maintenance. Yet, when repairs are necessary, generally they are much more expensive to fix due to the level of complexity in the design. Also, due to the equipment used for the electrical control, there is a very real potential danger of water damage, as such the level of activities a patient can use the prosthetic for are decreased.

There are many attempts to create electrically controlled prosthetics, differing in methods, degrees of freedom, and other varying factors. Currently available commercial prosthetic arms cannot gain wide spread acceptance due to their limited degrees of freedom motion. Thus, in order to create commercially viable prosthetic hands, designers aim to increase the flexibility and control of a hand, while at the same time trying to maintain an aesthetically pleasing device. One such method is the device [1] created by Kazuo Kiguchi, and Subrata Kumar Kundu, shown in Figure 2.2.

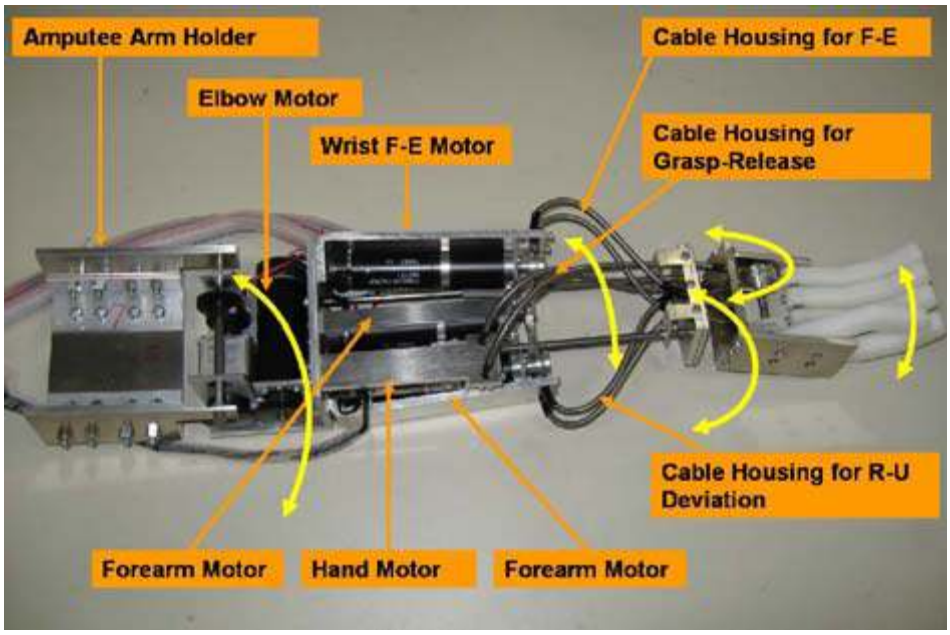

Figure 2.2: Design of the forearm

They have proposed a 5 DOF transhumeral prosthesis for after elbow amputees. The design was built to the approximate size of the average human arm, with the forearm portion measuring to 28cm, and the total length reaching to 45cm. They employ five DC motors are used to generate the desired five degrees of freedom. Their proposed design requires the elbow motor to carry the load of the other motors, and the remaining motors do not carry any of the load. As discussed previously, human elbow muscle control takes place in the upper arm of the body, while in this device the elbow control motor is situated in the proximal portion of the prostheses in order to leave enough room for the device to fit firmly into the socket. The other motors, which control the forearm, wrist, and hand grasping respectively, are situated in the forearm portion of the device. Placing all five in the proximal portion of the device lowers the inertia but also reduces the amount of clutter in the end effecter region allowing for the required gripping space. In designing the device the pair managed to keep the weight of the device 2.3kg, to approximately the same weight as your average human forearm.

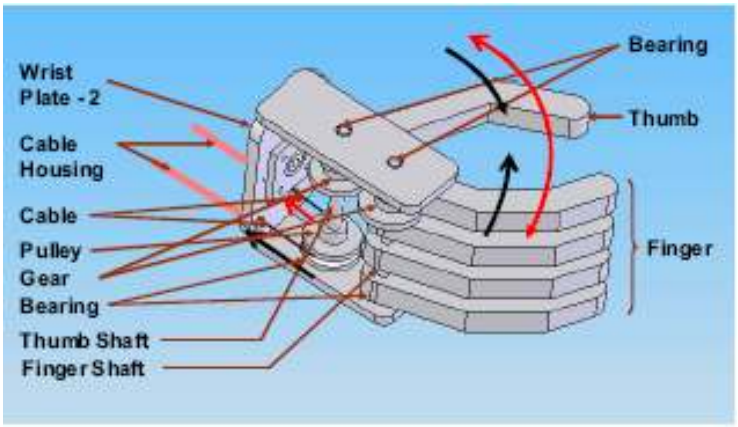

Figure 2.3: Design of Mechanical Hand

The hand of the design is required to provide grasp release motion cylindrically, which is important for very simple daily motions. Shown in Figure 2.3, the desired schematic of the hand is presented. For sufficient grasping space the hand motor was placed in the forearm of the prosthetic. The palm of the proposed prosthesis hand is defined by two metal plates inside which two shafts are placed to hold the fingers and thumb by using four ball bearings. Four fingers of the prosthesis hand are located on the outermost edge of palm and the thumb is located on one side of the palm. To generate the

grasp you simply apply polar opposite movement between the fingers and thumb. The rotation of the hand motor provides the opposite direction motion for the fingers and thumb.

Another technique employed is the method created by used by Applied Science department at John Hopkins University, using the technique of reinnervation. Their device allows the patient to control a fully integrated prosthetic arm, which is controlled naturally with the added ability of sensory feedback to perform eight degrees of freedom actions. The Proto 1 is a complete limb system allowing for a virtual environment to be used in patient training, clinical configuration, and to record movements.

Their high level of control and mobility are due to the method developed entitled Targeted Muscle Reinnervation (TMR), which involves the transfer of residual nerve fibers in unused muscles to a different region of the body. For Proto 1, these are transferred to the patient's chest. The procedure enables a more intuitive use of the prosthetic due to the sensory feedback that is enabled from the transferred muscle tissue. Clinical testing shows an amazing amount of control for functional hand movements. Various fine tuning actions were attempted including the removing of a credit card from a pocket, switching thumb position for different grips, and stacking cups.

In contrast to virtually every other technique available, the Proto 1 allows the user to have an incredibly high level of control while and receive feedback. Due to the electrodes placed directly on the nerves, the Proto 1 has incredibly accurate measurements on the desire of the patient. Also, the device can provide any number of feedback sensations that most other techniques lack. The patient is able to directly feel the gripping strength of the prosthetic when holding an item. Also, reports have shown that the patients have begun to feel temperature sensations from the items or environment they are interacting with. Further developments will allow the prosthetic arm to have more than 25 degrees of freedom, and capabilities approaching those of a human arm. Finally the device will have more than 80 sensory feedback elements to relate to the user sensations of touch, temperature and position.

While this piece of technology provides by far the greatest amount of mechanical arm control there are still several drawbacks to the project. First, the device is vastly sophisticated; as such you have all of the negative impacts that come with such a technology such as maintenance, and initial cost. Secondly, the device must be altered to fit the given patient. When measuring EMG signals, various people have various output signals to the arm for control. As such, when designing the arm, there is a training period where the patient has to learn how to 'think' of the arm moving, and for the controller to begin to match received signals to the desired movements.

Chapter 3

Statement of Problem

This chapter will expand on the problems that must be accomplished in this project in order for the bionic hand to be motor operational and receive feedback. A generalization of the project is given to develop the various component blocks of the various exertions that need to be achieved so that the Bionic Hand will be able to have motor control from the user and have the ability to give sensory feedback to the patient. The various component blocks will be separated into extraction of the user input, input to the microcontroller, the construction of the prosthetic hand itself, and the mechanics behind creating an attachment mechanism. These four major sections will highlight the theory that is needed to understand the methodology to solving these problems which is an important aspect for the design process which is discussed in the following chapter.

3.1 Overview

In order to better understand the specific work done for this part of the project, some insight into project as a whole should be discussed. To gain a better understanding of the theoretical developments of the four major stages of the work done for this part of the project, it is important to know what to expect in the form of input to the four major stages as well as what to expect from the output. Having this knowledge will result in a better designed system of stages.

Figure 3.1 below shows the flow diagram of the project as whole outlining the input into the system, the signal manipulation, and the output to the transradial prosthetic. As shown in the figure, the user input is regulated by hall effect sensors, the theory of which is explained in further detail below, then passed on to the input regulator whereby it changes the boundaries of the hall sensor to desired voltages. The microcontroller takes

this voltage, and interprets the received message, and outputs the corresponding desired hand movement to the prosthetic.

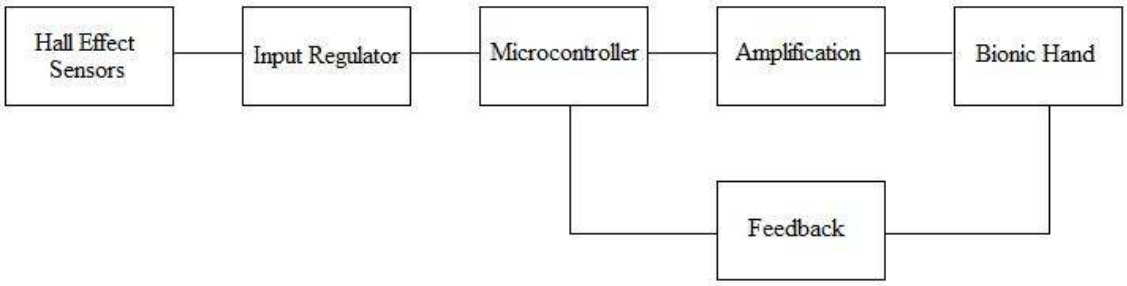

Figure 3.1: Flow diagram for Bionic Hand using Non Invasive Interface

There are several problems that must be addressed over the course of this design. First, it must be noted that the theoretical process changed throughout the term as techniques were revealed to be ineffective, or potentially harmful to the patient. Thus, first a method to extract the user input has to be developed. This technique must have the ability to receive user input, while not inhibiting the motion of the hand. Secondly, due to the microcontroller's limited range of acceptable input voltages, a method has to be developed to combat any potentially harmful voltages from entering the microcontroller. Therefore, some form of circuitry has to be created to negate the effects of and dynamic inputs. Finally, a method needs to be shaped to control the mechanical prosthetic. Then based off of this technique, the mechanical hand must be designed and constructed to be as minimally invasive as possible.

3.2 User Interface

The user interface unit is a glove worn by the patient that can detect flexion and extension of two fingers, the output of which will be used as input bits to the system. The purpose of selecting such a method, as discussed previously, was to allow for simple human to computer interfacing. As such, the design required a method that could detect when the fingers were in the signal position or not to an accurate degree, while at the same time avoid limiting any physical hand movements of the user's remaining hand. Thus to diminish the invasiveness of the glove portion of the hand we required the

sensors to be on the back of the glove. For if the sensors were on the front of the hand, there would be issues with activating signal when pressure the palm of the glove up against various objects.

Thus, the process of detecting flexion and extension are done using two linear Hall Effect sensors which will output a voltage dependent on the magnetic flux, or how much magnetic field is passing through the sensors at any given moment. The amount of flux is proportional to how close a strong magnet is. The voltage results from an unequal charge distribution along conducting surfaces. Since the flux lines of a magnetic field decrease with distance, the closer the magnetic field is, the stronger the flux will be and greater the voltage. Therefore, we can expect that the Hall Effect sensors will output a voltage into the system dependent on distance. When a finger flexes, the magnet is passed over the sensor resulting in that sensor to be deemed on. When the magnet is passed a certain distance or region from the sensor we expect the sensor to be off. Thus, we can theoretically decide the sensitivity of the Hall Effect sensors by selecting how close the magnet has to be over the sensor before the sensor reads it is on. This is shown in Figure 3.2.

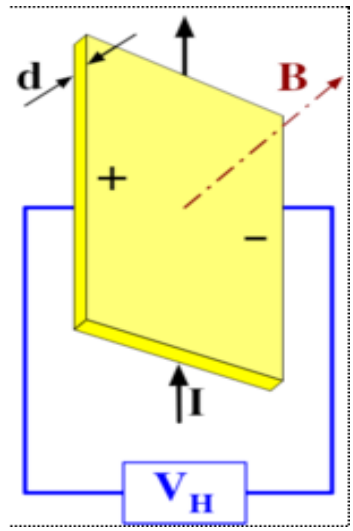

Figure 3.2: Hall Effect

3.3 Input Regulation

The Hall Effect sensors, when acting ideally, have a low output of 2.5V, and a high of 5V. However, as these are real pieces of equipment they have varying boundaries. For the purposes of a 4-bit system, we only require the sensors to be considered on or off. Therefore, some form of comparator is required to check to see if a set threshold voltage is met to turn the bit on or off. As discussed previously, if the levels of the hall effect voltages are known, we can then directly set the sensitivity of the user input. Thus, if the sensor voltage is higher than the set threshold, the comparator sends the voltage high, which indicates to the microcontroller that the bit is on. In contrast, if the output from the hall effect sensors are below the threshold voltage, the Hall Effect sensors are determined

to be off, telling the microcontroller that the user is not flexing a finger on the control glove.

As we want users to have ease of control, the sensitivity is an important aspect of the project. The higher the threshold voltage, the closer the magnet has to be to the very center of the sensor, requiring a higher level of precision than is desired for simply flexing your finger. While at the same time, too low of a threshold and the user may accidentally force a bit to become active if the person flexes their finger slightly. As such, a medium has to be found whereby the signal is triggered only when the patient desires, while at the same time can do so very easily.

From here, since the comparator takes the voltage input from the hall sensors to the rail voltage, we need to then convert the rails to 0V and 5V, to be off and on respectively, at the input of the controller. Thus we need a boundary shifting amplifier consisting of a summation amplifier and an inverting amplifier to acquire these values.

The microcontroller takes the incoming data, and deduces the required output position. Thus, the microcontroller then sends out signals on designated pins to the motors to control the direction of hand control movement.

After the output from the microcontroller, it was necessary to develop a method of physically moving the fingers as desired. To do so analyses needed to be made upon various methods that could force contraction in the fingers. For the prosthetic hand, there are numerous issues that are required to be thoroughly addressed. First, the end effecter on the device is obligated to be able to perform several functional hand positions. It would defeat the purpose if the fingers on the artificial hand failed to be able to move to any significant position. Secondly, the frame of the arm must be as realistic as possible so as to allow for the patient to feel more contented with the aesthetics of the project. Finally in combining the two previous issues, when building the frame for the device there are a few factors that need to be discussed. For example, the size of the frame is directly dependant on the method of contraction, thus a method of contraction needs to be developed for the frame of the hand to be small enough, and lightweight, but still have the overall grip force that is desired. These three factors are the basis for which the project's objectives are set in terms of the Bionic Hand. The device aims at fulfilling the

need for a simple, cheap method of hand contraction that which patients with one arm can control. The overall frame of the mechanical hand is directly dependant upon the materials we use, and thus, in regards to the contraction materials, various criteria that would be analyzed to determine the best choice. Among these criteria are the force generated by the material, size, cost, and power consumption.

However, before looking at the contraction materials, an analysis should be made on the material that will make up the frame of the prosthetic. For the actual frame itself, there were several things that were required. A material needed to be found that could have the ability to be strong enough to be able to withstand the weight of the components being used in the prosthetic. Also, the material had to have the capacity for variability. Prior to the commencement of the design process an unclear direction on how we wished to take the project was present. Thus, the frame material chosen had to be able to conform to a variety of different shapes and sizes.

The solution to the dilemma was the introduction of Meccano as the primary construction material. A large set of Meccano was purchased due to its capacity to fulfill the frame requirements. The set contained numerous pieces of stainless steel, thus providing materials that could safely withstand the weight of any type of contraction method that may be taken. Also, due to the large variety in the pieces that come with the set, the design of the prosthetic could be almost anything that was desired. An added benefit to the Meccano set was that a large number of pieces related to the use of motors were present. As such, if motors were chosen as the method of choice for hand contraction, parts would be readily available upon notice.

3.4 Prosthetic – Muscle Wire

One of the first items observed was a type of wire called Nitinol, or Muscle Wire, which is a type of shape memory alloy. This is a type of material whose purpose is to remember its shape after being deformed. By applying heat to the shape memory alloy, the material will deform to a different shape. Memory alloy, when harnessed correctly, becomes a lightweight, solid-state alternative to typical linear actuators such as hydraulic, pneumatic, and motor-based systems. Shape memory alloys commonly act in two separate modes of deformation: one-way and two-way shape memory.

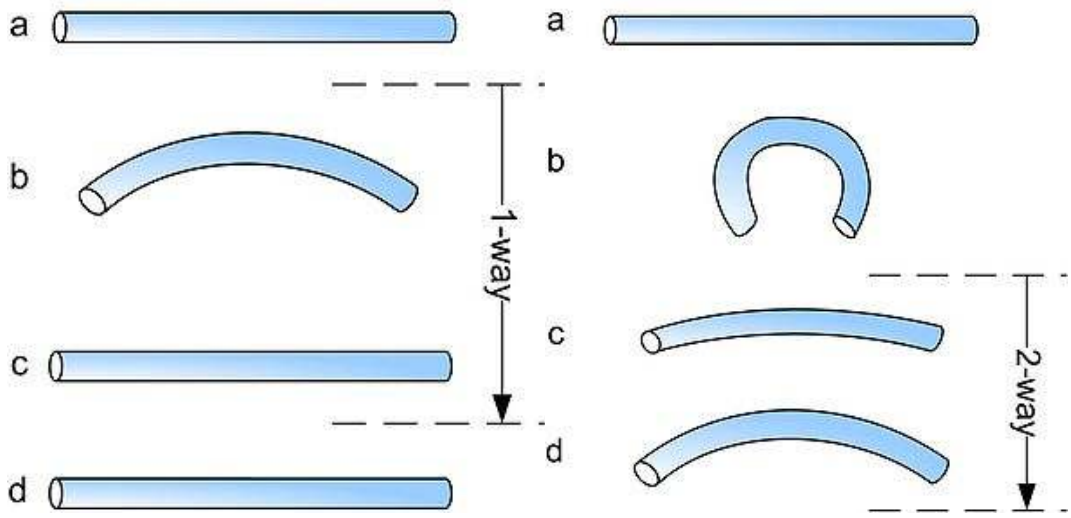

Figure 3.3: Starting from resting position (a), adding a reversible deformation for the one-way effect or severe deformation with an irreversible amount for the two-way (b), heating the sample (c) and cooling it again (d).

In its cold steady state, shape memory alloys can be deformed into a number of shapes and size, and will stay in a given state until the shape is heated above the transition temperature. Then, at this point the metal alloy reverts back to its original state prior to the cold deformation. The reversion process is not dependant on the cold deformation state, as such the alloy will always return to its original shape. Finally, once the alloy cools, the metal will still remain in the original state until deformed again, and the process begins again.

When using a shape metal alloy of the one-way effect type, cooling the alloy from high temperatures does not cause a shape change. As discussed previously, a deformation is required to fashion a low temperature state shape. Thus, when heated at high temperatures the alloy reverts back to its original state. On the other hand, two-way shape memory alloys use the effect that a material can remember two different shapes, one for high temperatures, and one for lower temperatures, meaning these allows exhibit the shape memory effect in two temperature directions. Another benefit of two-way shape alloys are that they do not require an external force. Thus, in order to obtain the two steady states, the metal has to “learn” them. When heated to high temperatures, shape memory alloy forgets about the previous state of being prior to the heat, and immediately reverts back to its original shape. However, in two-way shape metal alloys, these metals

can be taught, through constant deformation at lower temperatures, to revert back to a second state for cooler temperatures. One issue with this is that if the metal is heated to such a high temperature, there is a likely chance that the trained lower temperature deformation will be lost, and the training process will have to be recommenced.

So, theoretically, a device could be set up in such a way that could use two-way shape metal alloys to act as a method of control. We could set up straight wires, or springs made of Nitinol to act in a similar method to tendons. When heated, the Muscle Wire would then contract or extend depending on the heated stage of the wire, then the wire could be trained to revert back to the opposite state. Another method would be to have opposing wires, one for acting as an extensor, and the other as a flexor, and simply use one-way effect shape metal alloy.

3.5 Prosthetic – Motors

As discussed previously, there are a number of issues with selecting the method of finger contraction. Size, weight, and gripping strength are all major factors that must be critiqued when designing a robotic hand. Using motors is a common method in constructing this type of device. Motors vary in types, sizes, and shapes allowing for a variety of ways to approach the given problem, which is one of the reasons they are used so often. However, the primary reason for the usage of motors is their control abilities. All sophisticated motors have the ability to provide position feedback to the controller. As such, the controller can always tell where the position of the end effecter is, and be able to act accordingly depending on the desired trajectory of the user.

There are two main types of motors that are used in practical control situations: DC motors, and stepper motors. Servo motors are used for closed loop control systems which use work as the control variable. DC motor controllers direct operation of the motor by sending signals representing velocity to an amplifier, which is used to drive the motor. A feedback system device or some form of encoder are generally incorporated within the servo itself, or are externally mounted, typically on the servo. The purpose of the feedback system is to provide the motor’s position and velocity back to the controller, which is then compared to the desired trajectory of the program, where the programming

is dependant upon the signals received from the user. The ability of the servo to adjust for the inequalities between the actual and desired positions, and is directly dependant on the type of control systems and motors used.

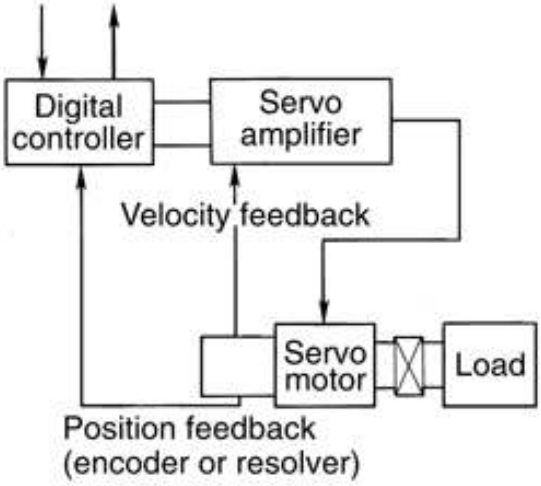

Figure 3.4: DC servo motor system with feedback.

DC motors work through the conversion of electric power into mechanical work. To accomplish this feat, the motor forces current passing through a coil, thus inducing a magnetic field, this in turn spins the motor. The input voltage to the motor pass through the internal coil of the motor by brushes which are connected to the DC source. The brushes are found at the end of the coil wires, and make connections with one another every 180degrees. Meaning Current will flow through the wires every time the motor is in the 0 or 180 degree position.

One method to control the servo motors is to simply control the duty cycle of output from the microcontroller, this method is term pulse width modulation. This technique is utilized in a number of areas, ranging from power control, to measurement and communications. Simplifying the concept down, essentially a square wave is sent to the servo motor at a designated wavelength, and the servo moves to a given position of velocity depending on the type of servo. The generalized pulse width versus servo position is shown in the figure below:

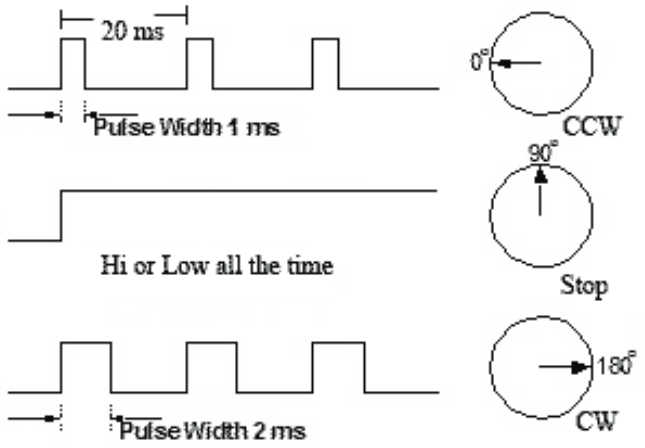

Figure 3.5: Servo Motor Pulse Sequence

Another type of motor that could be used is called a stepper motor. While servos require DC voltages applied at opposite terminals, stepper motors utilize multiple electromagnets arranged in a circular fashion around a centralized iron gear. Essentially, the motor energizes a given electromagnet to offset the iron gear from the next electromagnet. Then the next electromagnet is energized causing the offset magnet to rotate towards the second magnet. This process repeats over and over to achieve full rotations, where each of these slight rotations is called a step. The controller keeps track of these steps, and thus can always tell where the position of the motor is at in a given moment.

For motors, the theoretical design consisted of determining a way to contract the fingers via rotation of the motors. A general overview of the thought process was to have the microcontroller control each terminal for every motor in the system, whereby each motor controls a separate finger in the mechanical hand. The microcontroller would set a given polarity on the motor by setting one terminal high for when a finger was desired to flex, and set the other terminal to high when the finger was supposed to go to the opposite direction. As such, the microcontroller, and thus the user, could have full operation of the mechanical hand. The motors would be connected to the fingers via strings, which would act as cables in the system.

3.6 Prosthetic – Socket/Attachment

Another issue with this project is determining a way to attach the prosthetic to a person. This is not a major objective of the project as a whole since the project is more proof of concept based. However, it is still critical to analyze the problem and develop at the very least low level methods on how to solve the attachment problem. As this is an undergraduate course program, there are certain methods that can be analyzed, however they are beyond the realm of possibility for the group to accomplish.

Since the group is incapable of performing a surgery involving attaching a bolt to a bone, or creating a legitimate accurate plastic mold of a stump, then other methods must be thought of. The biggest issue with creating an attachment mechanism, is that of patient comfort. Clearly, if the patient will be wearing the device for extended periods of time, it must be as harmless as possible. Most likely, some form of harness will need to be designed to implement this portion of the project.

Chapter 4

Experimental or Design Procedures

Within this chapter are highlights of the design and experimental procedures for the previously stated issues that are necessary to the full completion of the design. First, the design procedures section will be explained, followed by an accurate description of the experimental methods. In particular, the design procedures will elaborate upon the development of the control glove, briefly touch upon the input regulator to the microcontroller, and then expand into much detail on the mechanical hand itself. For the experimental methods, explanations on how the stages developed in this project must integrate with the rest of the project as a whole. Essentially, this section consists of an analysis on how the testing stages of the Bionic Hand were completed, and the influence of the tests upon the final design of the hand. At the end of the chapter, a detailed description of the capabilities of the hand is given along with the methodology on how to operate the Bionic Hand.

4.1 Design of a Control Glove

During the design process for the glove, there were several steps that needed to be taken to create a fully function user controlled glove. The first step in the process was to outline the necessary elements that were required for the glove to function. The next step was conceiving of ways to put these elements together in such a way that it is easy for the patient to employ, and while at the same time being as minimally invasive as possible. This means determining ways to avoid compromising the abilities of the patient's remaining hand, such as the patient's ability to touch, feel, and generally operate with the world around them as they normally would with minimal effect.

The first part of the solution was to purchase and test the hall effect sensors. Hooking them up to a 5V power supply, it was determined that the sensors behaved as desired. When the magnet was over the sensor a high voltage was produced, and when there was not magnet over top of the sensor the output was 2.5V. Also, something to note is that if the polarity of the magnet is reversed, instead of the voltage going high to 5V, the magnet actually goes to 0V. In actually, the rails of the output voltage from the sensors go from -1V to 6V, which implies the output from these sensors need to be altered to fit the desired limits of the microcontroller input.

A circle on the component surrounds the actual magnetic sensor. This circle indicates the farthest point the given magnet can be from the sensor to induce a noticeable voltage change. Experimental measurements were taken at various lengths between the edge of the circle and the center of the sensor, and as expected the voltage increases linearly over the distance. This is important because the sensitivity of the user input can be selected by looking at these values and determining how close the magnet has to be over the center of the sensor to deem the bit on.

Once the sensors were deemed appropriate to function, the next logical step would be to implement a design that could utilize these sensors to their maximum capacity. A method was conceived that would allow the user to flex their fingers while keeping the user's palm uninhibited. The sensors would be placed on the back of the hand, whereby they would avoid getting in the user's way. The magnet would be attached to a string wrapped around the given flexors. To deter from the magnet sliding off the hand, it was determined some form of track would be required. The preliminary design is shown below:

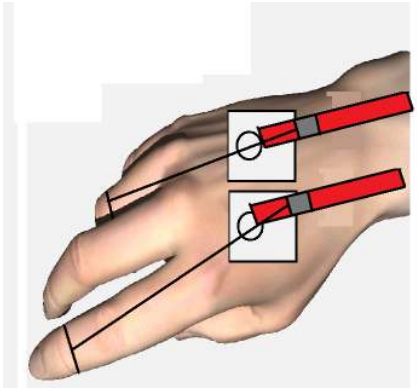

Figure 4.1: The preliminary design of the control glove.

As can be seen, when the user would go to flex their input fingers, the string attached to the tip of the finger, pulls the magnet along the track to come over the sensor. This completed the theoretical design of the glove, and thus the first thing that needed to be accomplished in the actual construction was to start putting components together. One of the issues that came to mind was that if the user only has a single hand, they may find it difficult to put on some gloves. Therefore, the control glove had to have to ability to allow people to simply slip their hand in, with little to no effort. Thus, the glove selected for this project was a leather winter glove with a wide wrist.

Next, plastic tubes, slightly thicker in diameter than the magnet, were cut to the length of 10cm so that they would act as the track for the magnet. Finally strings were cut to act as the cable pulling the magnet from the tip of the flexing digit. The strings were able to be shortened or lengthened depending on the distance covered when a user flexes their finger. This allows for wide variability and repeatability with very little personalization. The final form of the glove was constructed via directly attaching the hall effect sensors to the back of the glove. Then the tubes were placed immediately over top of the sensors to allow for accurate translation over the sensor. Methods were developed to counteract the movement of the magnet so as to bring it back to the resting position when not flexed, however the added methods caused too much friction for quick movement of the magnet through the tube. The finalized control glove is shown below:

Figure 4.2: Finalized Control Glove

4.2 Design of an Input Regulator

As discussed in the previous chapter, the purpose of the input regulator is to take the dynamic ranges of the hall effect sensor, and convert them to workable voltages. There are four main components to the design of the input regulator, the comparator, the inverting amplifier, the voltage follower, and the summation amplifier. The comparator acts as a detector from the hall effect sensors to determine whether the bit is on or off. The threshold voltage set on the comparator directly sets the sensitivity of the user input to the microcontroller. The comparator then rails the voltage to the voltage supplies, thus the rest of the circuitry is designed to shift the rails to 0V and 5V to represent when the circuit is off and on respectively.

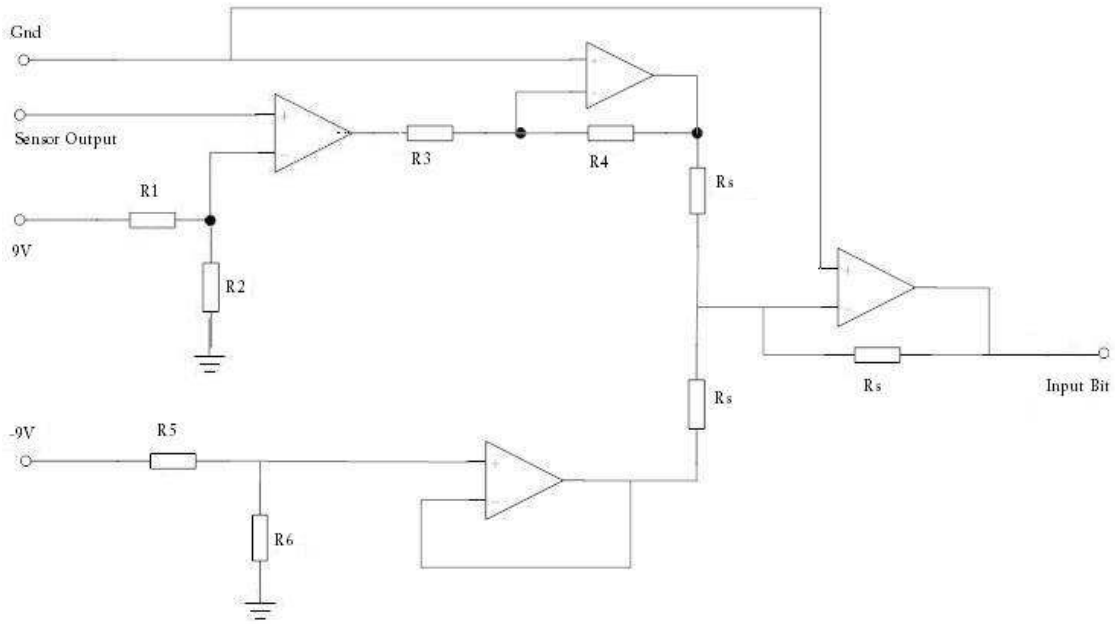

Figure 4.3: Input Regulator circuit

For the above circuitry, through experimentation it was decided that a 3V threshold voltage on the comparator was sufficient to decide if the finger was flexed far enough. The 3V mark indicates the voltage must be within a relatively close distance (approximately 0.6cm) to the sensors in order for the bit to be termed as on.

Table 4.1: Resistor values used for the input regulator

Resistors	Values
Resistor R1: Used for V_T	20kΩ
Resistor R2: Used for V_T	10kΩ
Resistor R3: Used for inverting amplifier	100kΩ
Resistor R4: Used for inverting amplifier	33kΩ
Resistor R5: Used for constant -2.5V	22kΩ
Resistor R6: Used for constant -2.5V	10kΩ

4.3 Design of a Prostheses Using Muscle Wire

When first starting out the project, the method chosen to complete the project was to use Muscle Wire to act as the contracting force for the prosthetic hand. There were several reasons the group decided on taking this approach to the project. The first, being that Nitinol is relatively cheap in comparison to motors. Another example of why the shape memory alloy was chosen was because of its physical attributes. As Muscle Wire is simply as its name suggests, just wire, it is much smaller and much lighter than motors would be. Therefore we could potentially create an incredibly lightweight alternative to common transradial prostheses. Due to never using the material before, there was some skepticism on whether the wire would be able to generate enough force to physically contract the fingers of the hand. Therefore several methods were concocted to combat this potential liability. However, as indicated in the table below, the wire theoretically should have been able to pull with 590 grams of pull force at 610mA current.

Table 4.2: Muscle Wire Attributes [6]

Diameter Size (Inches)	Resistance (Ohms/ Inch)	Maximum Pull Force (grams)	Approximate* Current at Room Temperature (mA)	Contraction* Time (seconds)	Off Time LT=70° C Wire** (seconds)	Off Time HT=90° C Wire** (seconds)
0.0010	45.0	7	20	1	0.10	0.06
0.0015	21.0	17	30	1	0.25	0.09
0.002	12.0	35	50	1	0.3	0.1
0.003	5.0	80	100	1	0.5	0.2
0.004	3.0	150	180	1	0.8	0.4
0.005	1.8	230	250	1	1.6	0.9
0.006	1.3	330	400	1	2.0	1.2
0.008	0.8	590	610	1	3.5	2.2

As can be seen, the Muscle Wire with diameter 0.008 inches was ordered, and expressed as a material that could pull with 590 grams of force. Even if the contraction force was not enough, the thought process was that by bundling a bunch of the wires together, nitinol would enable the contraction force to be much greater than a single wire would otherwise be. The nitinol would act in a similar manner to tendons whereby the wires would pull the fingers into a flexed or extended position.

Several experiments were carried out on the Muscle Wire to determine its effectiveness in terms of flexing and extending the fingers. The first test of the Muscle Wire was to see the abilities of the wire to deform and reform from one position to the next. After deforming the wire in the cooled stage, current was passed through the wire. The wire typically reverted back to its original state; however some of the trials nothing apparent seemed to happen.

While initial tests produced less than favourable results, further experiments needed to be conducted before moving on to another idea. Several further trials were conducted by connecting the nitinol between two pieces of Mecanno and ground the one side, current was once again passed through the Muscle Wire after initial deformation. The shape memory alloy followed the same erratic behaviour as the initial experiments. In some instances the pieces of metal would move together, in other trials the pieces of Meccano would move farther apart, however the majority of the time the Meccano simply stayed in place while the wire slightly jumped. Varying different factors seemed to

have no effect whatsoever. Changing the length of the wire, size of the Meccano pieces, or the deformation of the Muscle Wire did little to nothing towards creating a particular pattern of results.

For one last test, the group attempted to bundle the wires together in the hopes that the contraction of multiple wires together would produce legitimate results. Once again, the Muscle Wire failed to act in any form of coherent manner. From one trial to the next the results were completely inconsistent. If anything the trials only seemed to demonstrate the level of safety issues associated with the use of the Muscle Wire. Throughout the trials the wires would burn through various methods of adhesive to the Meccano pieces, including electrical tape. Also, it was discovered that the Meccano was conductive to the charge being passed through the Muscle Wire.

4.4 Design of Prosthetic Using Motors

Once the Muscle Wire was found to be ineffective in all functions that were required for the mechanical hand, it was then determined the group had to approach the problem from another angle. Reverting back to the original list of possible ways to contract the mechanical arm, the next logical method would be to utilize motors. At the time of this occurrence it was more than halfway into the academic term, thus time was of the essence.

Motors were donated to the group for the purposes of functional end effecter control. The motors themselves were of an unknown type of control. They were of significant size, and came with five wires that entered into the motor. Without a component sheet a vast amount of testing went into determining what type of motors the given components were so as the group could control them effectively. Applying DC voltages to two of the wires extending from the motors could force the motor to move in a given direction. Putting a high voltage on one of the wires would spin the motor clockwise, and applying the voltage on the other wire would reverse the polarity. Once this was found, many experiments were conducted on the other wires to find out exactly how to control the motors. Taking the motors apart, we found that the other wires were connected to some form of encoder. However, this in no way helped to identify how the motors could be controlled via the microcontroller as it was intended.

Thus, due to time constraints, progress had to be moved forward, regardless of the lack of knowledge of the motors. Therefore, reverting back to the main objectives of the Bionic Hand, the primary goal was to create a prosthetic with the ability to move to various positions. Thus, an end effecter had to be designed that has the capabilities of moving to different arrangements. In order to create such an end effecter, there were numerous factors that had to be looked at. Firstly, a major issue is how big the end effecter will be, and secondly, how many degrees of freedom will the end effecter have. It was determined for most applications a minimum of three fingers would be required to perform the required acts.

For the end effecter's three fingers, designs had to be created in order to perform movements as a finger, while at the same time look relatively similar to an actual human finger. The digit needed to be sturdy enough to hold a given position, while at the same time flexible enough to move from one position to the next. Thus, it was determined a longer piece of Meccano would act to create the majority of the finger length, and a shorter, angled piece would be employed to be the fingertip of the given digit. The schematics for which is shown in the figures below:

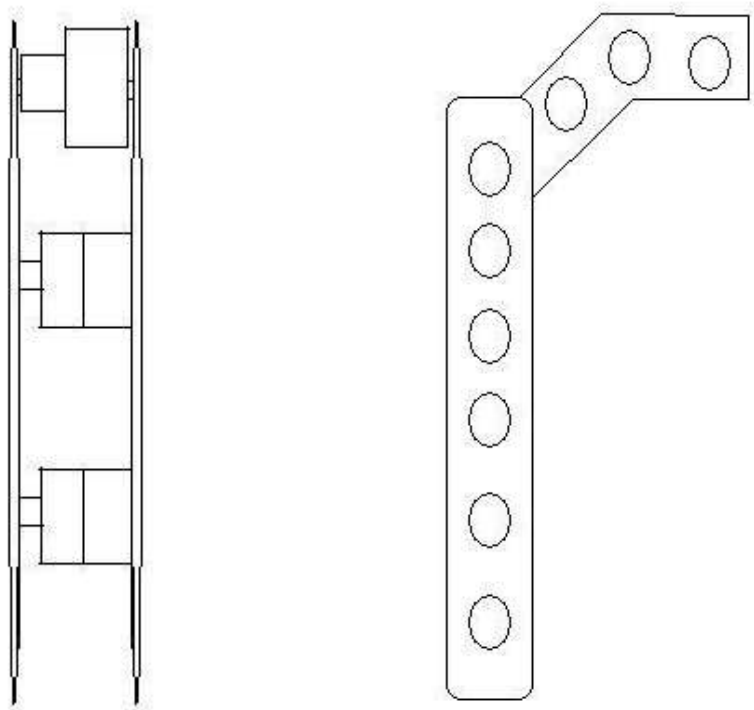

A) B)

Figure 4.4: A) Front view of the finger; B) Side view

To test the effectiveness of the fingers, wires were connected to the end of the fingertip, and then brought down around the motor. Preliminary tests showed that contraction with the design was very possible, however there were issues with the extension of the fingers. When the finger was fully flexed, the motor was incapable of bringing the finger back to the resting position without an abundance of time. It was realized that as torque is a cross product, when the motor was attempting to pull the finger in the opposite direction as the fingertip angle, the torque would be zero. Thus, to compensate for this a pulley was added to the top of fingers to add in an angle, allowing for torque to take place. This addition to the design is shown to the right.

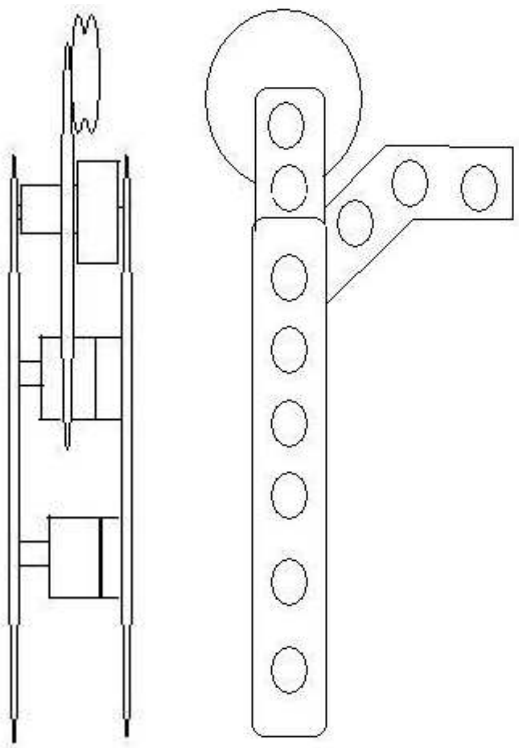

Figure 4.5: The above figures show the addition of the pulley to the finger system.

Now that the finger design was set, the next step was to set up three of the fingers in such a way that the end effecter will be able to accomplish various tasks. The logical choice for this was to set up a claw like hand. With two of the aforementioned fingers spaced apart on one side of the hand, and a slightly modified version to act as the pointer finger, which would be situated in the middle of the two fingers on the opposite side of the hand. The modified pointer finger has two joints instead of just the one because the pointer finger was originally designed to be controlled by two motors. However it was decided simply controlling the pointer finger with one motor was sufficient. The fingers were all mounted onto a flat base filled with holes that allows for the control strings to pass through the interior of the frame. Below is a close up figure detailing the end effecter of the Bionic Hand:

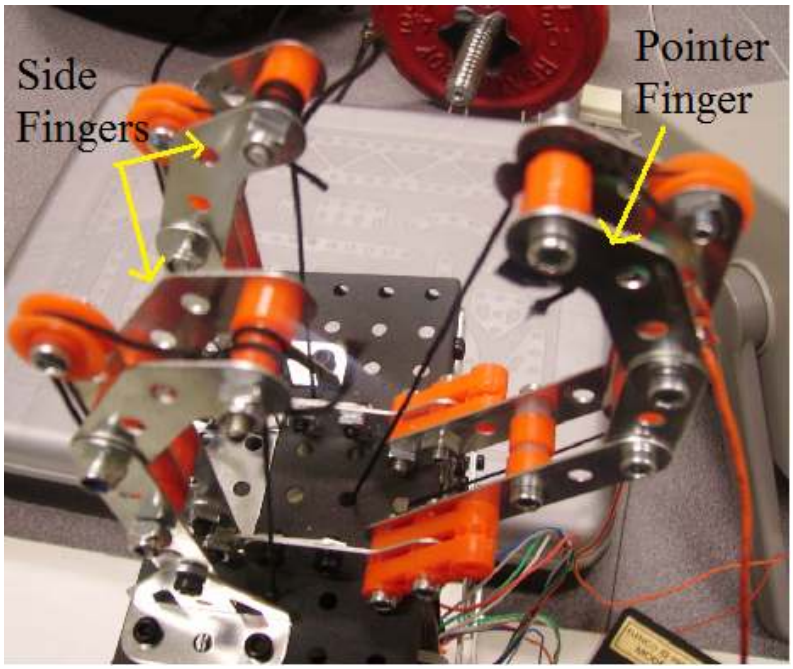

Figure 4.6: Design of the end effecter for the prosthetic hand

Now that the end claw effecter had been designed and built, the next part was to construct the mechanical arm portion of the prosthetic. The forearm of the mechanical prosthetic will house the motors, and various components that help to control the arm. The question is how to design the forearm to attain the maximum number of desired parameters set out prior to the project. To reiterate, we require the forearm to be as lightweight as possible, be aesthetically pleasing, be able to easily control the fingers and be strong enough to hold the weight of the entire prosthetic.

Due to the large size of the motors, the forearm of the prosthetic was also going to have to be proportionally big. In order to contain the motors and various other components the forearm has to be sufficiently large to allow for manipulation of the inner workings of the device. However, by making the device larger, it also becomes heavier, and more invasive on the patient. Thus, addressing each of these parameters individually, while keeping in mind the limited amount of material left after the construction of the hand lead to current design.

However, prior building the frame, a method on how to physically manipulate the fingers from the rotation of the motors had to be designed. If there was no contraction method in place before the construction of the frame, the design could potentially conflict

with the method of control. Therefore, there were two basic approaches that were considered; one was directly manipulating the joints of the fingers to generate movement, and the other was through manipulation of the fingertip. Directly controlling the joint of the finger would make the system much easier to manipulate, but there is the issue that by doing so, added components around the finger would clutter up the gripping area of the hand. In contrast, by controlling the fingertips there would be significantly less components in the end effecter area, however by controlling the fingertips some form of string or cable would need to be use, and strings in particular are notorious for malfunctioning if not correctly utilized. As a group, it was decided that the string method would be preferable as it was desired to leave the end effecter as uncluttered as possible to allow for gripping items with the least amount of obstruction from the hand.

Now that it was known what the generalized method of contraction would be more detailed designs for how the strings will actually manipulate the fingertips needed to be made. Once again, two main methods were contrived to answer this issue: a one-way control method, and a two-way control. The one-way method consisted of using the motors to rotate an axle with the string wrapped around it. The axle would then rotate in such a way as to pull the fingertip down to the contracted position. Then to return the finger to the resting position, springs would be used to provide a counterproductive force to extend the finger back. The two-way control method is essentially using the motor to rotate in two different directions to control both movements of the finger: flexion and extension. Two strings would be wrapped around the axle, one wrapped in a counter-clockwise manner and the other clockwise. The idea being that as the motor rotates the axle in a given direction; the direction of movement string would tighten up a certain length, whereas the opposing direction would slacken up the same amount allowing for complete control.

While less direction manipulation would be required as the microcontroller would only be rotating the motor in one direction, there were issues with the one-way control method. First, adding springs to the fingers would add further components to an already complex end effecter, thus potentially inhibiting gripping objects. Secondly, from a control point of view, since it was unknown how the motors operate, once the finger was in its contracted position and the motor stopped rotating, the spring would begin to pull

the finger back to its resting position before desired. Thus, as there is no position feedback on the motors, once the spring pulled the fingertip back, the timing on the programming would be off, and thus errors would occur.

Therefore, the two-way method of control was chosen to eliminate these factors. However, the two-way method was not without its potential dangers. As discussed previously, strings tend to have to ability to knot up, loop around the wrong way, and depending upon the elastic properties of the string, may throw off timing. By using two-way control, it is essentially doubling the risk of something going wrong with the strings. Also, by doubling the amount of strings, you have twice as many cables running through the interior of the forearm, thus making it more disordered inside.

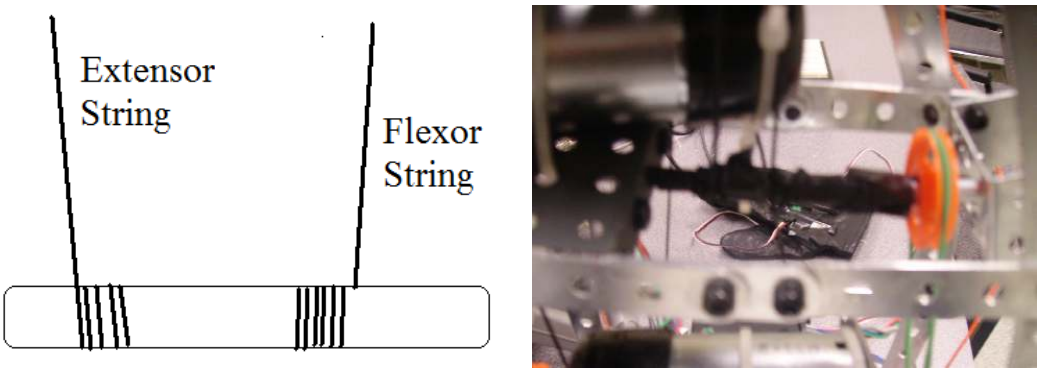

Figure 4.7: Theoretical two-way control axle (Left) and the finalized constructed axle (Right)

Now that all of the preliminary designs were made, actual construction of the forearm had to begin. The forearm had to be large enough to house all of the motors, the axles, pulleys, and strings that would be required for finger control. Also, the forearm was desired to look somewhat like an actual arm, thus factoring into the overall frame of the arm. At the commencement of the design process, it was determined that four motors, as opposed to the final three, would be used. One motor for each of the side fingers, and two for the middle pointer finger to allow for further pointer finger dexterity. As such, the frame of the forearm was designed to house four motors. The, pointer finger was reduced to only a single motor control when it was found that the interior of the mechanical prosthetic became too convoluted.

The frame itself, built from Meccano pieces, was constructed to appear as if a large upper arm. The frame was divided into four subsections, one for each motor. Cross-sectional pieces acted as stabilizers to the system, as well as gave the axle pieces objects to run through in order to obtain fast, clean turning.

For the design on the forearm, a lot of the thought process and development came from through experimentation. As progress was made, pieces of the frame would have to be altered to accompany the new additions. The main frame was attached to a wooden base to increase structural support to the forearm. The completed robotic arm is shown to the right.

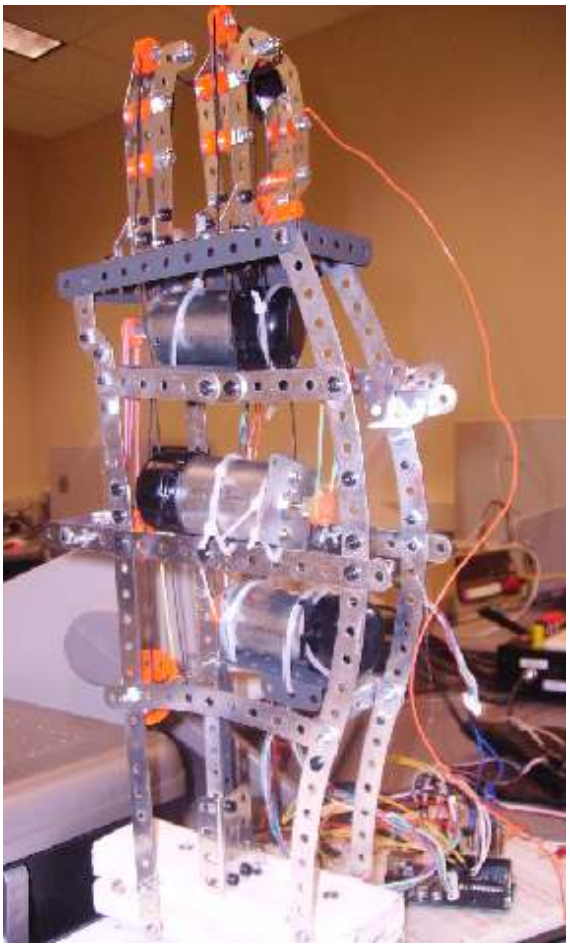

Figure 4.8: Final robotic arm

As can be seen from Figure 4.8, the mechanical forearm is a complex mixture of a variety of components aimed to achieve an end goal of creating a mechanical hand capable of moving to multiple positions. The Figure shows the level of intricacy of the interior of the forearm when all of the components have been added. Specifically the motors took up an inordinate amount of space, thus limiting the amount of room available to place the pulleys and axles.

To achieve this end result, a number of factors had to be taken into account. The placement of the motors, pulleys, and axles were dependant on how the three types of components would interact with one another, and the manner in which the strings would progress from the fingertips, down to the axles. The first thing to do was to set the motors into their various levels throughout the forearm frame. It was quickly realized that when the motors were activated, since the acceleration of the motor could not be controlled, the

initial jerk of the motor would force the motor to move, and disrupt the system. As such, the motors needed to be strapped down, and secured tightly. This was accomplished via strapping the motors down to the frame with the use of zip ties.

Another thing to note about the motors is that their axles are attached to a gear like object. It appeared to be designed for a specific purpose, and would not suit for the turning of the two-way control axles. An initial test experiment was conducted to determine whether the gear head of the motor would have sufficient traction to hold a belt in place to turn a two-way axle. Immediately the rubber belt fell off of the head of the motor, as such, the motors were not satisfactory in their desired function. To compensate for this deficiency, pulleys were attached directly to the head of each motor so as that when the motor axle turned, the belt would be resting in the pulley as opposed to the gear head, and thus not fly off as it previously would when simply resting on the gear head.

Once the motors were securely in place, the rest of the interior construction could begin. As touched upon before, the cross-sectional pieces of the frame served two purposes. The first being that the pieces add stability to the system, and the second is that the pieces allow for the axles to align in the desired direction. It is imperative that the length of the axle is parallel to the length of the motor so as to allow the rotation of the motor to rotate pulley on the two-way control axle in the same direction, thus flexing or extending the fingers as desired.

In the original design the cross-sectional pieces where relatively far apart. As such since two-way axle components were not long enough to traverse the distance, multiple components had to be attached together. Doing so had some noticeable negative impacts on the quality of performance. The connected components of the axles would become slightly detached or angled, thus as rotation of the axle began only the one side would turn leaving the other side failing to turn. Or the angled axles would cause so much friction as they pass through the cross-sectional pieces that the torque generated from the motors was not enough to overcome the problematic friction.

Thus in further improvements to the design, the cross-sectional pieces were redesigned to compensate for the large distance issues. Specifically, for the top tier motor, the two-way control axle length was halved by the addition of an extra piece to the base of the forearm. The piece extended up to the two-way control axle giving support to the

axle, and coincidentally halving the distance. For the middle motor, while the length of the axle was not decreased, an additional piece added to the frame of the forearm enabling further stability to the axle, thus significantly decreasing the friction, and increasing its capabilities.

Throughout the entirety of the design process there were a number of issues that would occur periodically. The first issue being a continuation of a previously described problem, rubber belt containment. Initially when using rubber belts, there were serious issues with keeping them within the pulleys. Several attempts were made in order to eliminate these factors. Grooves were cut into the pulleys on both the motor and the two-way control axle to add traction so as to keep the rubber belt from falling off. Double looping the belts so as to have two belts causing friction between the pulleys to generate torque was another attempted method, but only served to cause more failures by having the two belts knot up together. Eventually it was determined that thicker belts of approximate diameter as that same length as the distance between the two pulleys were required for the belts to function properly.

The second consistent issue that would occur would be that the pulleys attached to the motors would come off. The shear stress was created when the belts were attached, thus producing a translation force trying to slide the pulley off of the motor. Various adhesives were applied in an attempt to keep pulley onto the motor. Hot glue would keep the components together for a significant amount of time, however it would eventually fall off just the same. Another tactic was to solder the pulley directly to the motor, however the solder would not stick to the motor gear head. Finally, a super glue adhesive was utilized and the pulley was permanently attached to the motor.

4.5 Design of an Attachment Mechanism

Due to the time constraints from problems midway through the term in constructing the mechanical hand, the design of the attachment mechanism was the last priority of the project. As such, virtually no progress was made on this part of the project for a number of reasons. The first of which, as stated, was time. After completely the first full functional Bionic Hand, the majority of the term was already over. Secondly, the design of the actual mechanical hand made it impossible to move around freely. Since the

entirety of the project is still wired, the patient would not be able to carry around the prosthetic at all. Therefore, no developments were made in terms of creating an attachment mechanism.

Finally, the last items added to the project were the feedback sensors. As to how the items actually work do not fall into this dissertation, there will be only a brief overview on how the feedback system works. Pressure sensors were placed on the tips of the fingers in order to measure the amount of force the user is applying to the object they are interacting with. Thus, as mechanical fingers begin to press down on an object the force sensors, which are variable resistors, change their output to the user based on the amount of force applied. The signal sent from these pressure sensors are then relayed to a visual feedback system to allow the user to have a limited sense of how hard the mechanical hand is gripping a given object.

4.6 Operation of the Prosthetic

The operation of the Bionic Hand is quite straightforward; the user puts on a glove to be worn on their remaining hand. The signals from the control glove are then sent to an input regulator whereby the electronic circuitry alters the boundaries of the hall sensor outputs to be manageable by the microcontroller. Dependant upon the user's input the microcontroller then outputs corresponding signals to the mechanical prosthetic to be altered. Currently, the signals sent to the motors are predetermined timed duty cycles based on experimental trials. The motors receive the signals and move to the appropriate position.

There are four positions that the hand can move to and from: the rest position, the grasping position, the pinching position, and the pointing position. To select a given hand position the user flexes their index and middle fingers to act as a 4-bit control system, where the first and second bits are the index and middle fingers respectively. The first '00' bit corresponds to the rest position, which is when all of the fingers are in their most extended places. Currently, when switching between positions the user has to return to the rest position before moving to a new arrangement. The second configuration, being the pointer position, is obtained when the index finger is flexed, thus the input being '01'. In this position the two non-middle finger digits are flexed down leaving only the pointer

finger in the extended position. The third configuration, the cylindrical grasp, is obtained when the user flexes their middle finger (‘10’). In this position all of the fingers flex to create a cylindrical grip so as the user can hold a cup, or similar item. Finally the ‘11’ position corresponds to the pinch arrangement, whereby the middle finger, and one of the other side fingers contracts, completing a pinch like configuration.

As has been described before, when the user is interacting with the environment, they will inevitably press something, or pick an object up. Visual sensory feedback is relayed to the user carrying information about the level of force the patient is applying to a given object. Thus, as the light on the mechanical hand gets brighter, the fingers on the transradial arm are pressing down with a much greater amount of force.

Chapter 5

Results and Discussion

In this chapter, the results of each part of the project design will be presented and discussed as to their effectiveness. In particular, this chapter will discuss the performance of the user interface, the input regulator, and the Bionic Hand itself. An analysis of the project as a whole is given in regards to the objectives laid out prior to the commencement of the project. The majority of the analysis will be conducted in a qualitative way, due to the nature of the project. Since there are no quantitative results, and the project is mostly based on whether it functions as desired or not. The performance will be critically appraised in terms of its ability to match with the previously stated objectives, whether said objectives were met, and if not what were the reasons they were not accomplished, along with the added benefits and detriments to the overall design.

5.1 Results of the Control Glove

For the user interface portion of the project there are no quantitative results. This section is simply an analysis of the effectiveness of the glove towards the final goal of the project. The design of the glove enables the user to very easily select a given position they desire for the hand to reconfigure to. The sensors on the back of the hand do not interfere with the movement of the hand whatsoever, thus enabling the user to perform the same tasks as they would have been able to, prior to wearing the glove. The wide entrance to the glove allows the user to simply slip their hand into the glove with little to no effort. Thus, the design of the glove meets all of the criteria set up for the user interface prior to the creation of the design.

In selecting a given position the user simply flexes their fingers to select the desired configuration. The user has little difficulty in flexing their fingers while wearing the control glove, and it is a very simple process to learn. With only a four-bit system, a user could become comfortable operating the glove within minutes of trying it. There is very little room for error so long as the user keeps their hand in a vertical position, the translation of the magnet along the designed track is very smooth, and the return to the off position is immediate.

However, the device is not as efficient as it should be. One of the problems with the glove is that is a rather thick winter glove. While the design of the user interface does not severely inhibit user movement, it does inhibit user sensory feedback. By wearing the glove, the user loses some of the ability to feel their environment. The user can still have a sense of pressure, however a good deal of the sense of texture is lost. Also, some of the dexterity humans have with their normal fingers are naturally going to be somewhat diminished due to wearing the glove.

There are a number of solutions to the issues indicated above. The first would be to have the user simply remove the glove when they know the position of the mechanical hand is not going to be changed for an extended period, or if they find it overly cumbersome. The second solution would be to design a unique glove developed specifically for this purpose. Whereby, the glove could have the palm and fingertips removed so as to allow the user to keep that sense of touch while controlling the mechanical hand.

Also, another issue with the current design is with the magnet positioning. In order for the magnet to immediately return to the off mode after the magnet has been pulled over the sensor the control hand must be held in a vertical position to allow for gravity to pull the magnet back. As described in the previous chapter, methods were attempted to remove this detriment to the design, however by adding in opposing forces caused too much friction for the magnet to move at all. While this is not a major issue in terms of patient discomfort, there is a lack of professional quality to it. As such, one method to fix this problem would be to select larger tracks for the magnets to pass through so as to allow the opposing force method enough room to come with the magnet while not causing it to get stuck.

5.2 Results of the Input Regulator

For the user interface portion of the project quantitative measurements could be recorded and observed. As indicated in previous chapters, the purpose of the input regulator is to receive voltages from the hall effect sensors on the control glove, and convert them to voltages that can be used by the microcontroller. We expected the high voltages from the hall effect sensors to become 5V at the output of the input regulator, and the lower voltages to become 0V.

Also, it was expected that the sensitivity of the user input could be directly affected by the set voltage level of the comparator in the input regulator. Thus, when testing the voltages we found that the two desired cases were true. When the finger was flexed for a given finger, the input regulator output voltage gave out voltages close to the desired 5V, and similarly for when the bit was off the input regulator output 0V. As predicted, by increasing the threshold voltage, the user must be significantly more accurate in position the magnet over the sensor. Thus, a threshold voltage of 3V was selected so as to allow the user the freedom of being close enough to the sensor, while still requiring the voltage to be higher than the default output from the sensors. The graph shown below demonstrates the results of the input regulator.

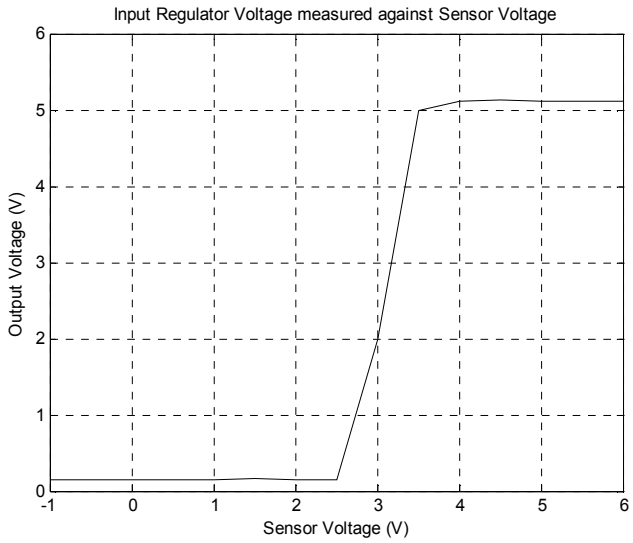

Figure 5.1: Graph showing the output from the input regulator versus the sensor voltage

5.3 Results of the Muscle Wire

As discussed in the previous chapters, the original method for contracting the fingers of the Bionic Hand was to employ a shape memory alloy called Muscle Wire. The design was to take the Muscle Wire and use pieces to act as tendons in a hand. When current would pass through the nitinol, the wires would contract and thus flex the hand. However, the Muscle Wire did not work as initially desired when put in to practical applications.

The testing stage of the shape metal alloy demonstrated the numerous problems of utilizing this technique in contracting fingers. The first and most important detracting factors of Muscle Wire were the glaringly dangerous safety hazards. In order for the Muscle Wire to contract, the wire has to heat up to at least 90°C, and then requires a 2s cool down period (See Table 4.2). Naturally, this is a very large safety issue if the person will be walking around with a prosthetic limb containing wires heated to high temperatures. Attempts to isolate the wires were ineffective as well, shown when employing methods such as electrical tape, the wires simply melted through the tape, and burned through the plastic on the circuit boards if left on for too long. Naturally from just a construction point of view, in a legitimate construction of a prosthetic using the method in this dissertation, likely components will be made of plastic, as such the Muscle Wire would simply be burning through the actual prosthetic.

Secondly, as the frame of the Bionic Hand is made of stainless steel, the frame actually conducted when coming into contact with the wires. As stated above, the wires could not be isolated due to the fact the wires were heated to such a degree that they would simply melt through any covering made. Thus, as the frame could conduct there are electrical isolation problems as well.

Along with the safety issues, there were physical limitations to the Muscle Wire as well. When testing the contraction strength of the nitinol, it was found that virtually no contraction force could be generated. In fact, the reactions of the Muscle Wire to when current was passed through were incredibly inconsistent. This resulted in a method that could not be predicted on how it would react at any given moment. Thus, in terms of all of the outlined objectives, the Muscle Wire fails in every category short of the effects on the weight and size of the Bionic Hand.

5.4 Results of the Prosthetic Using Motors

The final method of contracting the wires was to utilize a motor control system. The motors in the system would rotate two-way control axles, which would tighten strings and loosen strings to move fingers as the user desired. The system is based on rather qualitative descriptions as opposed to quantitative measurements. The objective of the prosthetic design was to create a prosthetic arm that met several criteria: to have a small size and low weight, the ability to move to four separate positions, and the gripping strength. Only analysis on the first two criteria may be made since tests were never ran to discover the gripping strength. The pictures below show the results of the mechanical prosthetic's capabilities to transfigure into four positions:

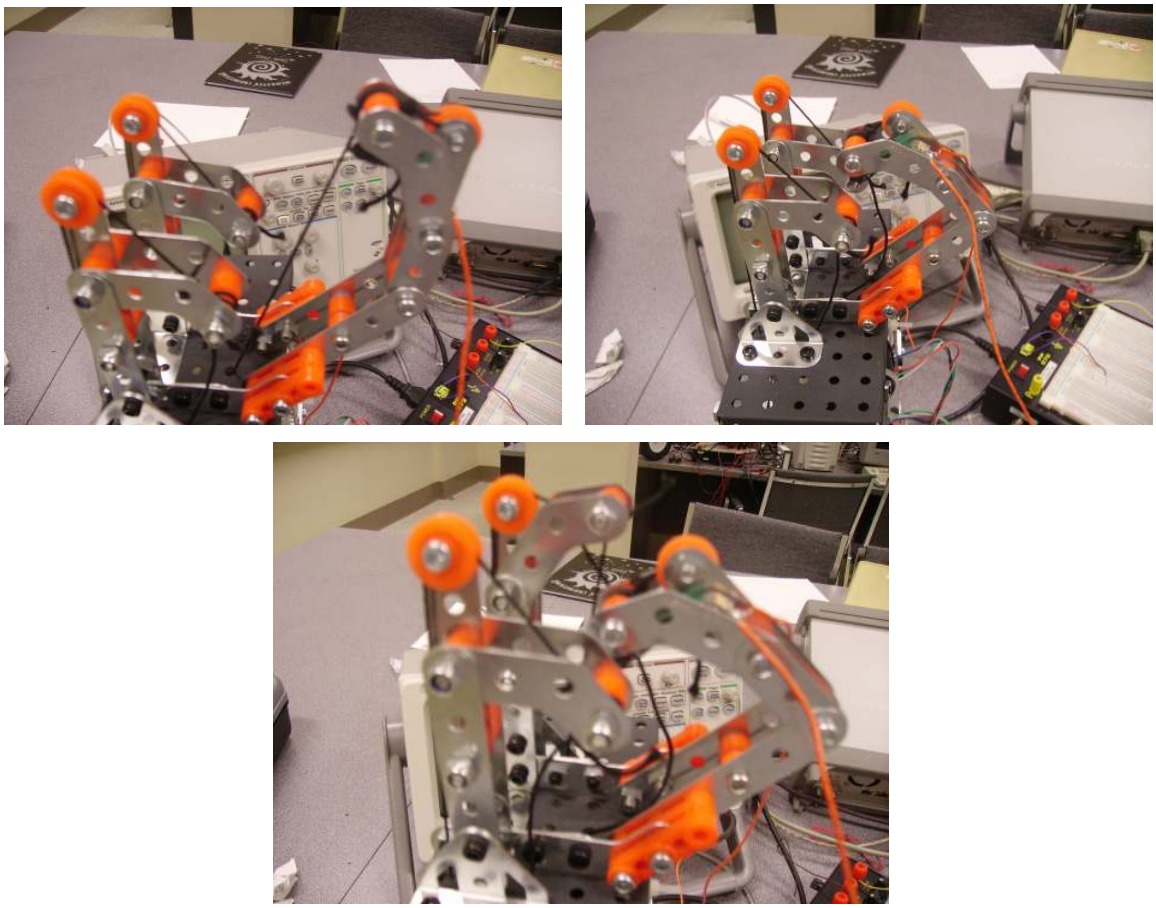

Figure 5.2: Pictures depicting the three non-rest positions of the prosthetic hand. The pointer position (Top Left), the grasp or enclosed position (Top Right), and the pinch position (Bottom).

As can be seen from the pictures above, the prosthetic arm has the capabilities to move to four separate positions (the three above, and the rest position). However, the components to make up the given prosthetic arm were incredibly heavy, and created a very large design. Further discussion will follow in the next section critiquing the unit as a whole.

5.5 General Discussion

This dissertation set out to create a device that would be able to receive user input and then convert that to a mechanical motion in a prosthetic. While the device is successful in achieving this objective, there are numerous flaws to the design that need analyzed. Simply put, the majority of the design for the prosthetic arm, and thus both its successes and failures stem from the use of the motors. Both the size of the motors, as well as the unknown manner in which the motors should properly function directly affected the design of the project.

The size of the motors, while enabling the device to have more than sufficient torque for finger motion, caused the device to have two major design problems. The first being the overall size of the project, and the second being power consumption. The size of the motors directly influenced the size of the frame for the prosthetic. Thus, as the motors were large, the frame had to be proportionally bulky. The overall mass of the prosthetic also increases, which would increase patient discomfort, which is the opposite of what is desired.

Power consumption for the project as a whole is incredibly high. All of the components run off of a +/- 9V power supply. Powering the glove, microcontroller, input regulator circuits, amplifiers, and motors requires an immense amount of energy. Naturally, the most power consuming of all the project components would be the motors themselves, which is expected as they need to convert electrical energy into enough mechanical energy to force a contraction of the fingers. If the motors used in the project were smaller, the power consumption could conceivably by considerably less, and thus save a lot of energy in the long term.

The next biggest issue has to do with the design of the two-way control axles, and the strings used for contractions. When flexing and extending the hand, the strings

wrapped around the axles cause a significant amount of trouble. Due to their elastic nature the strings loosen and tighten at different rates dependant upon how they are wrapped around the two-way control axle. Since the finger control was based on set predetermined timed output signals from the microcontroller, the dynamic nature of the strings forced the finger movement to be incredibly inconsistent. And without and position feedback from the motors there was no way to directly tell the position. In hindsight, hall effect sensors could have been employed to be used as a way to send position feedback to the controller. In a similar manner to steppers, a magnet could have been placed at the edge of the motor, and as it passed around in a full circle the hall sensor could detect the movement, and record it. The effects of the inconsistent nature in the strings and finger movement can be seen below:

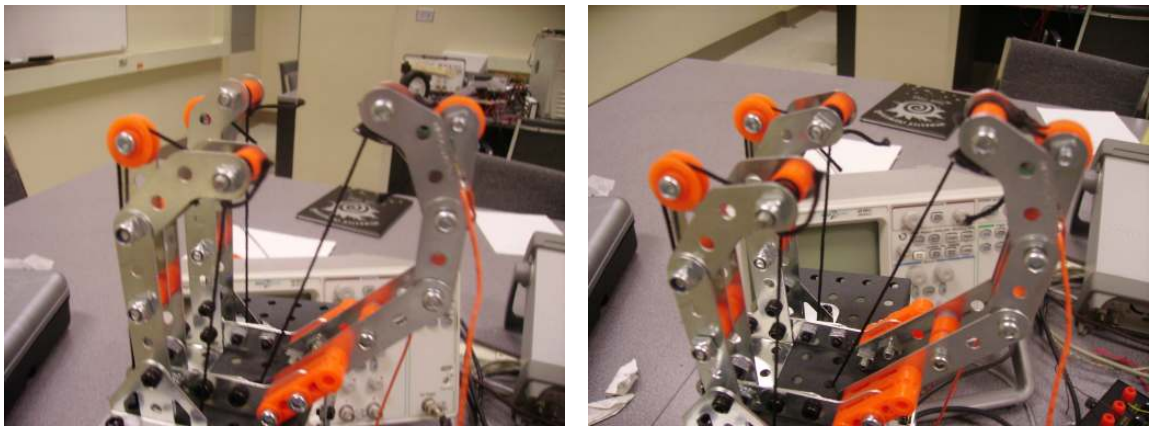

Figure 5.3: An open configuration with error (Left), and a desired open configuration

Another detriment to the design of the prosthetic is that of the claw itself. The whole purpose to using the two-way control method was to relieve the hand of clutter. However, when attempting to run the strings along the inside of the fingers, the amount of torque needed to do so was incredibly high. As such, in order to decrease the amount of force required, the flexor strings were angled in such a way that they passed through the center of the claw, as can be seen in the above figures. Thus, the strings could potentially be in the way when the hand is gripping something, which is the opposite intention of the original design, however necessary due to the force restrictions.

The complexity of the interior design to the prosthetic is another detriment to the design. If something goes wrong within the core of the forearm, more than likely at least some parts will be required to be removed in order to fix the issue. Once the parts are removed, there is still very little space to actually work with in terms of moving your hands within the body to repair the problem. Also, unless completing redoing the design and construction of the prosthetic, the structure and components are pretty much set in place. There is very little room for variability in the design, unless a complete overhaul is produced.

In terms of the project as a whole, another issue would be that the design is still completely wired. If a user were to be walking around with this device, their hands would be tied together. The proposed design would required for the control glove and the prosthetic to be completely removed from one another, allowing the patient the ability to move their control hand freely without being constrained to the prosthetic. Due to time constraints, dealing with the wireless capabilities of the project were not addressed.

Finally, the last issue with the design is in terms of the finger movement. In order to change from one configuration to the next, the prosthetic hand can only move one finger at a time. Not only this, but the prosthetic must always return to the rest position before proceeding to the next arrangement. Thus, this significantly slows down the operation time of the hand. With further time these problems could have been rectified, through better programming, however, as it stands at the time of this paper, it is still a problem.

Depending on the level at which you intend to evaluate the project as a whole, it can either come out looking really well, or not very well at all. Does the project serve to accomplish all of the objectives set out back in the introduction of the project? While some of the criteria laid out were not met, the project as a whole was a success. The project clearly demonstrates the Bionic Hand Using a Non Invasive Interface is clearly a viable possibility for future endeavours into creating transradial prostheses. However, the prosthetic arm demonstrated in this dissertation is in no way ready for any for further improvement. With a complete redesigning of the limb, the method of control explained in this paper is a very real, easy, and potentially cheap possibility for prosthetic control.

Chapter 6

Conclusions and Recommendations

The Bionic Hand Using a Non-Invasive Interface was a method developed to create a simple answer to a complex problem. The design group wished to implement a process by which a person missing a single arm could control a prosthetic limb. The design allows the user to very easily manipulate the prosthetic hand with little training. Simply contracting the glove hand fingers performs the desired acts of the user very quickly.

As discussed in previous sections, the Bionic Hand is nowhere near the level of retail sale. The weight issues limit the ability of the user to actually wear the prosthetic around for long periods of time, the power consumption is considerably larger than necessary, and the entirety of the project is still wired, thus you can not independently move both hands. Also, the movement of the fingers is less than adequate for proper prosthetic hand control due to the materials used, and the current level of programming.

Despite the stated issues, the goals set out prior to the commencement of the design process were achieved. A creation designed to interpret user input and cause motion of the fingers on the prosthetic hand was realized. The objective stated that the goal of the project was to create a system whereby the user can control an artificial hand via the flexion of fingers on their remaining hand, and this goal was completed. The concept as a whole was proven with the execution of the Bionic Hand. However, as stated previously, other project elements hamper the ability of the current Bionic Hand from behaving as was desired.

If proper materials were obtained for the control of the finger movement we could decrease the motor size to reduce both the power consumption, and the overall bulk of the

prosthetic, the project could be significantly improved. Extrapolating further, if there is knowledge of how the motors actually function the overall quality of product could be much superior to the current schematic. Naturally the next major step in the overall design is to make the device wireless, so as to allow for the user to manipulate both hands independently. If such enhancements are made, combined with the proven user-friendly control glove method, the Bionic Hand Using a Non-Invasive Interface would become an uncomplicated, feasible, and potentially superior way to operate hand prostheses.

Appendix A

Parts List

The following table describes the parts used in this project.

Part	Quantity
Meccano Set	1
Hall Effect Sensors	2
Glove	1
412 Operational Amplifier	4
High Power Op-Amp	3
Muscle Wire	3m
LED	1
Motors	3

References

[1] Kazuo Kiguchi, Subrata Kumar Kundu. Development of a 5 DOF Prosthetic Arm for Above Elbow Amputees. Proc.IEEE Apr. 2008.

[2] Micera S, Carrozza MC, Beccai L, Vecchi F, Dario P. Hybrid bionic systems for the replacement of hand function. Proc.IEEE (USA) Sept. 2006;94(9):1752-1762

[3] Valenzuela SO, Tinkham M. Direct electronic measurement of the spin Hall effect. Nature (UK) 13 July 2006;442(7099):176-179.

[4] Daisuke Nishikawa, Wenwei Yu, Hiroshi Yokoi, Yukinori Kakazu. On-Line Learning Method for EMG Prosthetic Hand Control. Electronics and Communications in Japan, Part 3, Vol. 84, No. 10, 2001.

[5] Yu Su, Mark H. Fisher, Adrzej Wolczowski, G. Duncan Bell, David J. Burn, Robert X. Gao. Towards an EMG-Controlled Prosthetic Hand Using a 3-D Electromagnetic Positioning System. IEEE Transactions on Instrumentation and Measurement, Vol. 56, No. 1, February 2007.

[6] Flexinol Muscle Wires Datasheet. http://www.jameco.com/Jameco/catalogs/c292/P164.pdf

[7] T. Duerig, A Pelton, D. Stockel. An overview of nitinol medical applications. Materials Science and Engineering A273-275 (1999) 149-160.

[8] Yen-Chuan Chang, Ying-Yu Tzou. Design of a Digital Servo Control IC for Permanent Magnet Synchronous Motors with Linear Hall Sensors. IEEE, Feb. 2007.

[VITAE]

NAME:	Christopher Kidd
PLACE OF BIRTH:	Somerset, Kentucky
YEAR OF BIRTH:	1987
SECONDARY EDUCATION:	Ernestown Secondary School (2001-2005)
HONOURS and AWARDS:	Ontario Scholar 2002, 2003, 2004, 2005 McMaster University Entrance Bursary