McMaster University
DigitalCommons@McMaster

EE 4BI6 Electrical Engineering Biomedical Capstones

Department of Electrical and Computer Engineering

4-22-2010

Design of a Non-intrusive 2-lead ECG System Using the Active Insulated Electrode

Winston De Armas
McMaster University

Follow this and additional works at: http://digitalcommons.mcmaster.ca/ee4bi6

Part of the Biomedical Commons

Recommended Citation
De Armas, Winston, "Design of a Non-intrusive 2-lead ECG System Using the Active Insulated Electrode" (2010). *EE 4BI6 Electrical Engineering Biomedical Capstones*. Paper 24.
http://digitalcommons.mcmaster.ca/ee4bi6/24

This Capstone is brought to you for free and open access by the Department of Electrical and Computer Engineering at DigitalCommons@McMaster. It has been accepted for inclusion in EE 4BI6 Electrical Engineering Biomedical Capstones by an authorized administrator of DigitalCommons@McMaster. For more information, please contact scom@mcmaster.ca.

Design of a Non-intrusive 2-lead ECG System Using the Active Insulated Electrode

By

Winston De Armas

Electrical and Biomedical Engineering Design Project (4BI6)

Department of Electrical and Computer Engineering
McMaster University
Hamilton, Ontario, Canada

Design of a Non-intrusive 2-lead ECG System Using the Active Insulated Electrode

By

Winston De Armas

Electrical and Biomedical Engineering

Faculty Advisor: Dr. Jamal Deen

Electrical and Biomedical Engineering Design Project Report

Submitted in partial fulfillment of degree of

Bachelor of Engineering

McMaster University

Hamilton, Ontario, Canada

April 22, 2010

Copyright © April, 2010 by Winston De Armas

ABSTRACT

For patients at risk of developing cardiovascular complications, it is important to monitor their heart signal to ensure proper functioning of their heart and a natural, healthy cardiac cycle. Preferably, this monitoring should be done on a continuous and long-term basis. Both of these objectives can be achieved using the electrocardiogram. While the traditional 12-lead ECG is currently used in hospital and clinical settings, the number of wires and the need for an electrolytic paste makes the setup very inconvenient, invasive and unsuitable for long-term use. The goal is to develop a clinical diagnostic system to take physiological signals from the patient and transmit it to a base station. This could permit the patient to be ambulatory and lead a relatively active life without being confined to a specific region. The project deals specifically with the design of a dry, portable ECG device for this system. The exclusion of wet electrodes without direct patient contact is achieved using the insulated dry electrode. The fundamental concept involved is the principle of capacitive coupling and the use of an impedance transformation circuit at the head stage. An insulating dielectric layer is placed in direct contact with the patient's skin and a metal electrode goes on top. The electrode carries an AC bioelectric signal through the capacitance of the coupling and this can then be conditioned in the analog domain. An analog ECG signal can be extracted, which can be digitized and logged. The theory behind the device, hardware design and experimental results are presented.

Key words: ECG, electrocardiograph, capacitive coupling, dry electrode, insulated dry electrode, non-contact, long-term, monitoring, physiological signals, arrhythmia

Acknowledgements

I would like to express my gratitude to my advisor and supervisor Dr. Jamal Deen and Dr. Thomas E. Doyle for their guidance on this project. I would also like to thank my family who has always been very supportive in every aspect of my life, including this project.

I would also like to thank my colleague Mohammad Arabi for his assistance and constant support.

Winston De Armas

Table of Contents

Abstract……...i

Acknowledgements.....ii

Table of Figures iii

Nomenclature iv

Chapter 1 - Introduction 10

1.1 Background 10

1.2 Objectives and Scope of the Project 13

Chapter 2 - Literature 15

2.1 Overview of ECG monitoring..... 15

Chapter 3 - Experimental or Design Procedures..... 17

3.1 Introduction..... 17

3.2 The design of the sensor 18

3.2.1 Insulator material 20

3.2.2 Size and shape of the coupling region 21

3.2.3 Choice of conductor material and form 21

3.3 Design of the analog signal conditioning circuitry 23

3.3.1 Headstage 23

3.3.2 Sensor impedance consideration..... 24

3.3.3 DC offset from the signal..... 24

3.3.4 High pass filters 24

3.3.5 Other filters 26
3.3.6 Inverting amplifier 27
3.4 Further refinement 27
3.5 Microcontroller 31
3.5.1 ADC 31
3.5.2 Power supply levels 32
3.5.3 Resolution 32
3.5.4 Programming for the ADC 32
3.5.5 Transmission to wireless module 34
3.5.6 Choice of wireless module 35
3.5.7 Setting up and implementing the wireless module 35
Chapter 4 - Discussion of Results 36
Chapter 5 - Conclusion 38
Appendix 39
Overview of the heart 39
Electric signal generation and conduction in the heart 40
The cardiac cycle 40
Atrial systole 41
References 43

Table of Figures

Figure 1 - flowchart providing an overview of the design procedure..... 18
Figure 2 - illustration of the capacitive electrode 19
Figure 3 - Instrumentation amplifier for headstage for -15V to +15V rails 23
Figure 4 - High pass filter configuration for -15V to +15V rails..... 25
Figure 5 - Sequence of filters..... 26
Figure 6 - Low pass filter configuration for -15V to +15V rails 26
Figure 7 - Notch filter configuration for -15V to +15V rails..... 27
Figure 8 - Single 3V Supply Instrumentation Amplifier 29
Figure 9 - Single Supply 60Hz Notch Filter with False Ground – picture taken from OP491 datasheet..... 30
Figure 10 - ECG produced using 2 standard Ag AgCl electrodes directly on the skin ... 36
Figure 11 - Example ECG with held breath using the capacitively coupled electrodes through a standard cotton T-shirt..... 36
Figure 12 - The physical structure and electrical conduction system of the heart - taken from http://gardenrain.files.wordpress.com/2009/03/electrical-impulses-of-heart.jpg 39
Figure 13 - Figure showing the changes in volume and pressure during the heart cycle - taken from HLTH SCI 2L03 lecture notes. 41

Nomenclature

Here is a list of key words that have been used throughout this report and their definitions:

ECG: Short for electrocardiograph. This is a representation of the electrical events of the cardiac cycle.

SAN: Short for sinoatrial node. This is the pacemaker of the heart since it generates electrical impulses that trigger cardiac contraction.

Cardiac cycle: The sequence of cardiac events in a single heartbeat – from one event in a heartbeat to the same event in the next heartbeat.

Holter monitor: a portable device for continuously monitoring the electrical activity of the heart for at least 24 hours.

Dry electrode: Any electrode that has direct or indirect contact with the patient without the use of an electrolytic paste.

Insulated electrode: Dry electrodes that utilize only capacitive coupling with no direct contact to the patient.

spO2: Saturation of peripheral oxygen. This is an estimation of the oxygen saturation level and is usually measured with a pulse oximeter device.

MATLAB: Mathematical software program

SNR: Signal to noise ratio – a reference to the ratio between the signal power and the noise power.

Chapter 1 - Introduction

1.1 Background

Health and access to health care is one of the major determinants of quality of life. The healthcare system in Canada is generally well-structured and there have not many complaints with regards to its functioning. But, as with all systems, there are some issues that still need to be dealt with.

As it turns out, doctors do not appear to be particularly thrilled with working conditions in Canada when it comes to their workload and how many patients they have to attend to. The following statistics speak for themselves:

- Over 200 physicians are lost each year to the United States
- For those that remain, the average workweek features more than 50 hours. That translates to more than 7 hours of work in a 7-day week, and over 10 hours of work on a 5-day week.
- Startlingly, this figure does not include time on call. Once on call hours are included, doctors typically work more than 70 hours per week.
- If the same European workweek limitations were instituted in Canada, this would mean an instant shortage of over 12,000 physicians.
- Doctors are so overworked that only 20% have indicated that they would accept new patients without any restrictions.
- In fact, 40% accept new patients only under select circumstances, such as referrals or family relations.

- 20% are not accepting any new patients whatsoever.

In order to ease the workload of Canadian physicians and in order to improve the quality of life and livelihood of patients, it is a reasonable prospect to want to eliminate as much of patient dependency on doctors as possible. If the patient needs clinical assistance, in the way of monitoring for example, that could potentially be provided by a non-invasive electronic system, then it is in the interest of the economy, the workforce and the patient to provide such a system.

Instrumentation devices have already become very common in research and in clinical settings within the medical arena. Researches as much as doctors and nurses heavily rely on electrocardiograph machines, pulse oximeters, and the like to help them to do their work effectively. By developing these devices, it would be possible to use them to further lighten the workload of interested parties and increase their efficiency and the quality of care they provide to patients.

The above-mentioned instrumentation devices are generally used to pick up physiological information from the patient that could be used to diagnose diseases as well as to prevent complications due to current conditions that the patient already has. As it stands right now, many of these devices still require the presence and attention of medical personnel, and also of the patient, within the hospital for them to be used properly.

The driving force behind this project is the desire to make it so that the patient can use the instrumentation devices independently and from the comfort of his own home or workplace. This would free up the medical personnel to pay attention to other aspects of their work, as well as liberate the patient from the confines of his hospital bed so he can lead a relatively active life. Our desire as biomedical engineers is to provide a medical device that can benefit society to a relatively large extent.

Cardiovascular complications account for the death of more Canadians than any other disease. Currently, they cost the Canadian economy an annual $22 billion in

medical attention, unearned wages and decline in workforce productivity [4]. Recognizing cardiovascular complications early makes it possible for patient and/or doctor to take preventative actions to avoid exacerbation (e.g. avoid a heart attack) and minimize the risk of irreversible organ damage and death. Monitoring risk groups (e.g. patients who just underwent bypass surgery or recently had a pacemaker implanted) could effectively reduce the incidence of cardiovascular complications. In cardiac medicine, it is already standard practice to carry out long-term recording of the electrocardiogram, but monitoring is kept to only a few days because of restrictions in technology and the impracticality of keeping patients in hospital indefinitely. However, for the accurate diagnosis of many cardiac diseases, especially for the wide variety of asymptomatic cases, continuous ECG monitoring for weeks or even months may be required [5].

The goal of the group was to deliver a combination of battery-powered, non-invasive, non-intrusive electronic devices for long-term continuous monitoring and logging of the ECG and spO2 of the patient. After data acquisition and treatment, results would be transmitted wirelessly to a PC.

My contribution to the project was to build a non-intrusive sensor to pick up the electrocardiographic signal from the patient, provide adequate signal conditioning in the analog stage, transfer the signal to the ADC of a microcontroller where it is digitized and prepared for transmission to a PC. The goal was to utilize a maximum of 3 electrodes in the chest area to monitor the time-domain ECG of the patient. The advantage of providing electrocardiographic monitoring is to permit diagnosis of easily detectable but not always present cardiac cycle irregularities. The best example of this kind of issue is infrequent arrhythmias. While they might not show up when the patient goes to the doctor for a checkup, they could be caught by a monitoring system that watches them even while they sleep. This could be done without confining the patient to a single location, and actually allowing him to carry out a moderately active lifestyle.

1.2 Objectives and Scope of the Project

In the interest of reducing the need for medical personnel to be constantly looking over patients and keeping patients from having to be confined to their hospital rooms for monitoring their electrocardiograph, the goal was to implement a system that could be utilized independently by the patient from the comfort of his home. The group planned to accomplish this by taking 2 physiological signals from the patient in a non-intrusive way that held potential for long-term monitoring and that the patient could easily put on and take off. The vision was that such a system could be used by the patient to avoid having to stay in hospital for monitoring.

The project is a combination of non-intrusive electrocardiographic and pulse oximetry sensors and data acquistion modules has great potential for the future of a continual monitoring system for patients who require it. The existence of an ECG sensor that can provide long term contact with the skin without irritation, along with simplicity of usage and removal holds great potential for coupling with a pulse oximetry sensor that is equally non-intrusive and is localized to the some corporal region. The two could potentially be incorporated into a wearable belt and set up for communication with the patients cell phone or PDA to log the parts of the spO2 and ECG signals that are of diagnostic interest to the patients physician.

In current clinical practice, patients are going to be literally hooked up to diagnostic instruments with a large number of wires to get their vital signs. Of course, risk groups require this form of monitoring to guarantee their health, but the attachment makes it very difficult for the patients to become mobile. Patients can quickly become bored, uncomfortable and even unhealthy due to the lack of movement. The result is that the patient suffers and his recovery process is slowed down. We feel that this type of instrumentation device that is used for long-term monitoring should be portable so as to

provide ambulatory monitoring to the patient. Our system will allow for the patient to walk around without being restricted to his bedside by moving with him. Wherever he goes, the system goes. This will allow the patient to be mobile while using the system.

As a result of this, the system could even be used during training and physical therapy. In both scenarios, patients are going to be linked in to a large number of electrodes to monitor their activity, if such activity is even possible, given the stationary nature of most ECG machines. Such systems are highly intrusive and it is quite difficult for the patient to participate in all of the movements and exercises that he theoretically should. He remains quite restricted for fear of disconnecting or disengaging the systems. Our system should theoretically be able to address this issue. The ambulatory and portable nature of our device will still permit the physicians to monitor the patient's activity, but will now allow the patient to perform more and for longer periods. This would obviously make the training a lot more effective.

Chapter 2 - Literature

2.1 Overview of ECG monitoring

The two primary long-term, non-invasive options available to patients (12-lead ECG in hospital or Holter monitor for home use) are both highly intrusive (attachment of an average of 7 to 10 electrodes is needed) and require constant attention and specialist knowledge for fitting and management. They both utilize the standard wet Ag/AgCl metal/electrolyte electrodes, which are simple, lightweight, cheap, disposable and have initial contact impedances low enough to permit good readings. However, their use takes these systems unsuitable for long term, unsupervised monitoring and spatially dense recordings.

Special preparation and maintenance of the electrode attachment site is necessary, so electrodes need be replaced frequently. In addition, longevity is minimal since dehydration of the AgCl gel changes electrode impedance, reducing signal strength and introducing noise and other artifacts into the system. The gel can also cause irritation to the skin and to harbor bacteria [6,7].

There has been much research on active dry electrode methods of acquiring unconstrained daily ECG. Dry electrodes are more comfortable to wear than wet, cannot fall off or dry out and are easy to apply, and the most promising results for our purposes have come from insulated electrodes, which utilize only capacitive coupling with no direct contact to the patient (dry electrodes also eliminate the skin irritation associated with the AgCl gel).

The first use of purely capacitive coupling to detect bioelectric signals was nearly a

half-century ago, but only recently have signal amplifiers with high enough input impedances become available to use them commercially. Since direct contact is unnecessary, active insulated electrodes are more easily integrable into wearables than dry electrodes [8,9].

This technique has been used to propose several applications to ECG detection:

1) An ECG bed for neonates as well as an embodiment for adults [10,11].
2) A wearable heart-monitoring shirt that is able to continuously monitor ECG wave for various applications [14].
3) A weighing scale that can detect the ECG through the feet and use the waveform to calculate systolic blood pressure [1].
4) An ECG detector by easy contact for rescue operations. The shirt need not be removed when checking for vitals [3].

These options are unviable, however, for the kind of long-term use envisioned by this project. The ECG bed is useful only for monitoring nocturnal ECG patterns. Wearing the same garment day-to-day presents issues with cleanliness and accumulation of bacteria. Measuring ECG from the feet makes the recording subject to large amounts of movement artifacts and electrode contact variations and is not suitable for continuous monitoring. The ECG detector by easy contact cannot be used for long-term continuous monitoring because there is no mechanism to hold it in place and compensate for movement artifacts.

Chapter 3 - Experimental or Design Procedures

3.1 Introduction

In this section, there will be a discussion on the design of the electrocardiographic monitoring system, starting from initial implementations, to further refinements. No results of the implementations are presented in this section, but under section 3 can be found the results of experimentation, as well as a discussion of these results. In this section, I will discuss the initial design overview, then the details of implementation.

The project was divided into 5 sub-projects, as follows:

1. The design of the sensor that will be in contact with the patient's skin and will pick up his electrocardiographic signal.
2. The design of an appropriate analog signal conditioning system that would clean up and prepare the signal for digitization on the ADC of a microcontroller.
3. The programming and setting up of the microcontroller side of things, in terms of the digitization of the signal and the preparation of the digital data for transmission to a wireless module.
4. The setting up of the wireless module to effectively link the microcontroller and the personal electronic device (in our case, a computer).
5. The preparation of adequate software on the computer to receive the wireless signal and provide logging as required.

Perusal of the following flowchart helps succinctly summarize these steps:

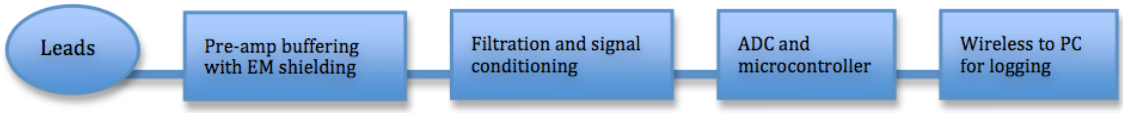

Figure 1 - flowchart providing an overview of the design procedure

3.2 The design of the sensor

Since the sensor is the part of the system that would be in direct contact with the patients skin, this part of the project was given much attention and research. Traditionally, the ECG sensor is a metal electrode that contacts the skin directly with an electrolytic paste and adhesive holds it onto the skin. Patients are frequently required to shave their chest before implementation of the system, and the electrodes cannot be held in place for too long before they need to be replaced by a qualified person. The potential for and incidence of skin irritation is very high so in my design I had to consider each of these factors.

1. The sensor must be non-irritant to the skin. Since it is going to be touching the patient's skin for long periods of time, the material cannot be abrasive.
2. The sensor must be easy to put on and take off, and should not require any special training to effectively implement.
3. The sensor should not require any special preparation by the patient, e.g. shaving chest, cleaning the chest, etc.
4. The sensor should be small enough and not so bulky so that it does not significantly impede the patient's day-to-day activities.

The following papers were utilized to assist in finding such a sensor: [6,7,8,9,10,11].*detail how each helped choose maybe in literature ereview*

Eventually, we settled upon the active insulated electrode, which picks up the signal from the patients chest via the principle of capacitive coupling:

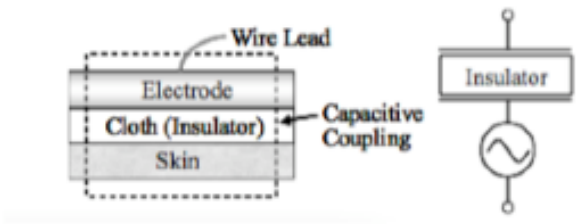

Figure 2 - illustration of the capacitive electrode

This technique eliminates the need for electrolyte pastes and conductive adhesives, and essentially features an insulating dielectric layer in direct contact with the skin and a metal electrode on top. The electrode carries an AC bioelectric signal through the capacitance of the coupling. In general, the primary concerns when building a capacitive coupling circuit are the need for a high capacitance value and coupling stability (i.e. minimal changes in capacitance value with time, temperature, humidity and other factors that are not easily controlled). The dependency of capacitance value on plate surface area, plate separation and dielectric constant provided me with a set of features that I can control.

3.2.1 Insulator material

The dielectric constant of the insulating layer has direct effect on the capacitance value so our choice of material for the insulator is the first design decision. Much research has been done into the properties (and applicability as insulators) of materials with high dielectric constants including but not limited to aluminum oxide, silicon dioxide and barium titanate.

Aluminum oxide – 8.0
Silicon dioxide – 3-5.0

Barium titanate – 1250-10,000 (20-120 degrees Celsius)

Though these materials exhibited high permittivity, they can really only be used for short- term applications. The need for long-term direct contact with the patient's skin means that using metals and metal compounds can be problematic. Lots of these materials have been known to cause irritation to the skin, often in the form of allergic contact dermatitis, and they can also increase the risk of developing eczema. In addition to these issues, there is the obvious problem of coupling stability when using a rigid structure.

A rigid body will not deform to fit the contour of the coupling region, so the area of contact will be highly variable with ordinary movements like breathing and walking. A variable area of contact introduces variation in capacitance. This results in undesirable coupling instability. In this specific instance, then, a balance must be found between achieving a high capacitance value and maximizing comfort and coupling stability. Deformable materials that are commonly used in everyday life are excellent choices to satisfy both requirements. Several studies report desirable results when using silk and

cotton as insulators. Lots of clothing contains a substantial percentage of these materials. In addition, they have moderate dielectric constants –

Cotton – 1.3-1.4
Silk – 2.5-3.5

and they are generally far less irritant and allergenic than metals and metal compounds.

3.2.2 Size and shape of the coupling region

Capacitance also depends directly on the surface area of the coupling region. Intuitively, to maximize capacitance I would need to maximize surface area and to minimize thickness. Research has shown that the surface area of the coupling region has a significant effect on the quality of the signal. There is a trade-off, however between signal quality and invasiveness. Since it is difficult to quantify the invasiveness of a particular electrode size, or the quality of a particular signal, the solution was to start at about 5 cm^2 and work upwards until signal quality is deemed tolerable without compromising bulk. I settled for a surface area of 25 cm^2 for each electrode.

3.2.3 Choice of conductor material and form

The metal-plate electrode is one of the methods most frequently used to record the electrocardiogram. German silver, steel and nickel are the materials most commonly implemented in this type of body-surface recording electrodes for the electrocardiogram. These metals all have relatively good electrical conductivity and remain affordable enough to be used in this project. (German silver has an electrical conductivity of 5.5, for example). Since the choice of material does not significantly influence the capacitance of

the coupling, copper and nickel are top choices since they are both quite readily available in many forms.

A key feature of this project is my decision to avoid rigid metal plates, since the coupling region in the pectoral area is actually curved. A rigid metal plate would act as a tangent to the insulator surface, resulting in low and variable contact with the insulator as the patient breathes and moves. In addition, some force would be required to hold it in place with maximal contact. To minimize these issues, a deformable metal plate will be used. Two viable possibilities were looked at to provide this feature:

1. Electroless nickel-plating – this is a chemical technique that can evenly deposit a layer of nickel-phosphorous alloy onto a non-conductive material like polyester cloth. Note that regular metal plating cannot deposit metal onto a non-conductive material.
2. Copper foil with conductive acrylic adhesive (provided by 3M) – this is sold as a roll of shielding tape at a maximum width of 1" and at lengths of greater than 18yds.

I've chosen to use the copper foil from 3M for a number of reasons:

1. The copper foil backing is solderable and resistant to oxidation and discoloration.
2. The tape is far less expensive than the cheapest electroless nickel-plating kit:
   a. 1"X18YDS tape at $51.47 per roll of 3M tape from Allied Electronics.
   b. $76.86 per Mini Electroless Nickel Kit from Caswell Plating.
3. The electroless plating is a procedure that requires attention and time for preparation. When done unprofessionally, it could result in uneven plating and create unwanted conductivity problems.
4. The entire copper foil is conductive, whereas only the surfaces of electroplated polyester can conduct current.

3.3 Design of the analog signal conditioning circuitry

3.3.1 Headstage

The output from the sensor is a differential signal in the range of 0-2.8 mV. A gain of about 1000 is required to have a useful signal. My first stage was therefore an instrumentation amplifier to provide this. Three considerations went into choosing the right op-amps for an instrumentation amplifier.

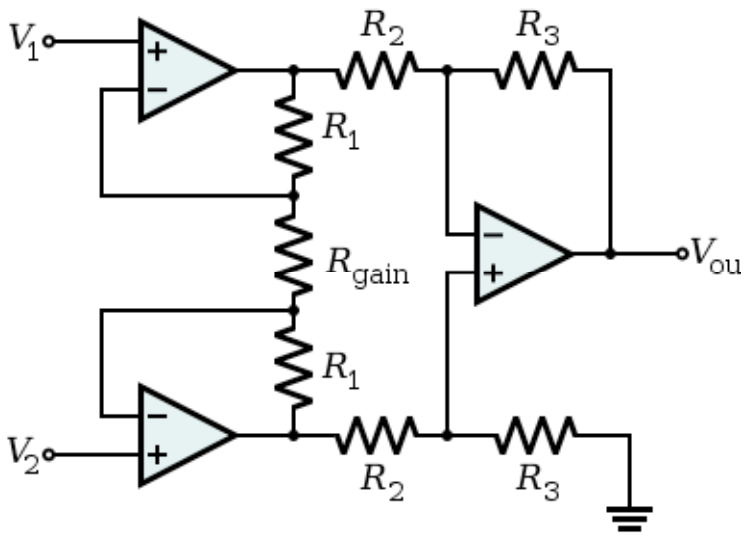

Figure 3 - Instrumentation amplifier for headstage for -15V to +15V rails

Resistor values are as follows:

1. Rgain = inf.
2. R1 = 0;
3. R2 = 1k;
4. R3 = 10k;

3.3.2 Sensor impedance consideration

In comparison with conventional insulators that have high dielectric constants, the use of cloth as the dielectric results in a greater impedance for the coupling. As discussed in the proposal, this means that the first consideration with our capacitive coupling sensor is the large output impedance of the electrodes. An impedance transformation circuit is required to lower this output impedance as required by subsequent active filtration circuitry. The input impedance of the transformation circuit must be very high. An instrumentation amplifier is already outfitted with input buffers, which eliminate the need for a separate voltage follower. The key is to employ op-amps with very high input impedances in the instrumentation amplifier. National Semiconductor LF356 was used (spec. sheet indicates input Z of 1000Gohm).

3.3.3 DC offset from the signal

The useful ECG signal is in the range of 0.05Hz to 100Hz, but patient movement introduces a DC component that can saturate the gain op-amp if the gain is set too high before artifact removal. For this reason, I set the first stage gain to be just 10.

3.3.4 High pass filters

Given the bandwidth of the ECG signal, 2nd order Butterworth high pass filters are used as the first stage to get rid of any DC components. The two HPFs are constructed using a digital potentiometer in the RC circuit to allow microcontroller influence on the cutoff frequency. This way we can set a high cutoff frequency ~1Hz during the day or when large DC offsets are detected, i.e. be strict on DC when the patient is moving around a lot. Since diagnosis of arrhythmias requires a good view of the ECG waveform

(ST segments for example) when the patient is relatively stationary, e.g. during rest, the cutoff frequency can be lowered to about 0.05Hz without adverse effects on signal quality.

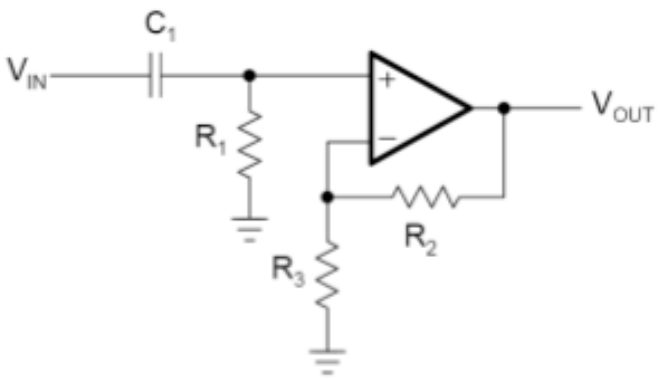

Figure 4 - High pass filter configuration for -15V to +15V rails

Resistor and capacitor values are as follows:

1. R1 = 3.24M
2. C1 = 1uF
3. R2 = 0;
4. R3 = inf.

3.3.5 Other filters

A 60Hz notch filter is used to get rid of power line noise, and a low pass filter at 100Hz is employed to reduce white noise by reducing signal bandwidth. Look at the given flowchart to understand the sequence of filters.

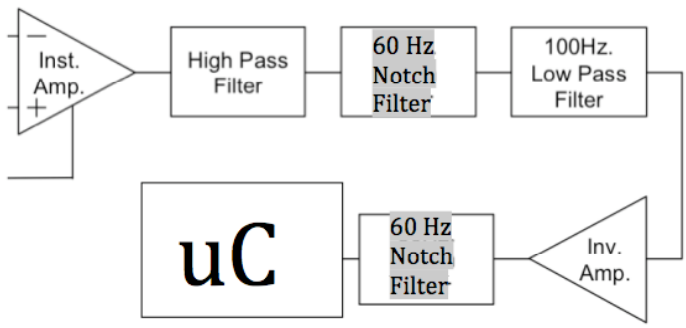

Figure 5 - Sequence of filters

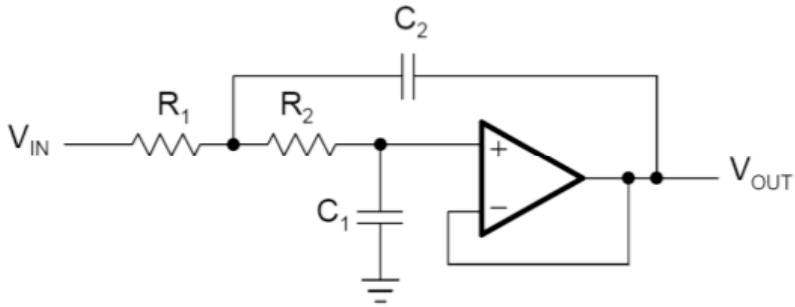

Figure 6 - Low pass filter configuration for -15V to +15V rails

Component values are as follows:

1. C1 = 0.2uF
2. C2 = 0.94uF
3. R1 = 4k
4. R2=9k

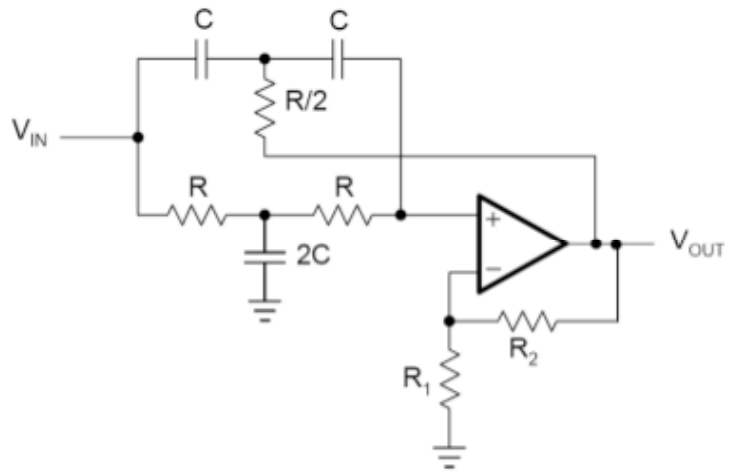

Figure 7 - Notch filter configuration for -15V to +15V rails

Component values are as follows:

R1 = 1M

R2 = 1.95k

R = 13.2k

C = 0.2uF

3.3.6 Inverting amplifier

A gain of -100 is used to invert the signal and get it upright once more.

3.4 Further refinement

The transimpedance amplifiers utilized in the first design require a power supply from -15V to +15V. If the overall system was to be implemented in a battery-powered

unit, then these voltage levels would be uncomfortable to achieve. I made the decision to use the regular OP191/291/491 in the headstage rather than the high impedance amplifiers that were discussed earlier. Granted, this would introduced distortion into the signal because we are no longer catering for the high output impedance of the capacitively coupled sensor, but the compromise was reached to provide portability to the patient user.

The 60 Hz notch filter was of 2nd order and was not doing very well in limiting the amount of noise that got through to the microcontroller, so I made the decision to use a 40Hz high pass filter rather than the 60Hz notch and 100Hz high pass filters. This way, much of the periodic qualities that allow detection of arrhythmias are still preserved. Research indicates that the 4-25Hz band is what is most effective in catching arrhythmias, so once we can hold on to this region we're fine.

Power supplies were changed from +15V and -15V to 0 to 3V. This meant creating a reference node at +1.5V to substitute for the ground that was previously being used in the circuitry. This was done using two equal-valued resistors connected between the 3V and 0V nodes and from between them drawing the 1.5V value. The circuit for the high pass filter accommodation and changed power supplies is shown below:

Since the signal was now coming out from 0-3V this allowed choice of the microcontroller without having to provide further refinement of the signal. This was another positive of my decision to change the voltage of the power supplies.

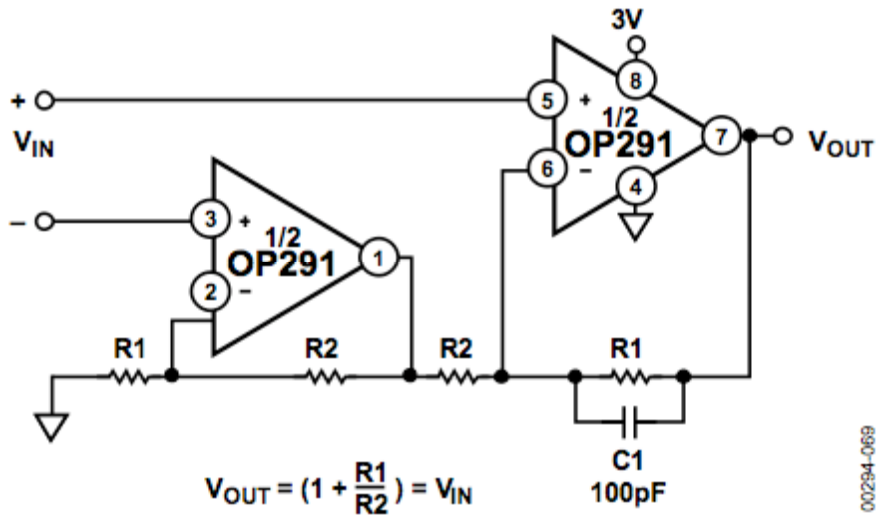

Figure 8 - Single 3V Supply Instrumentation Amplifier

Component values:

1. R2 = 1k
2. R1 = 10k

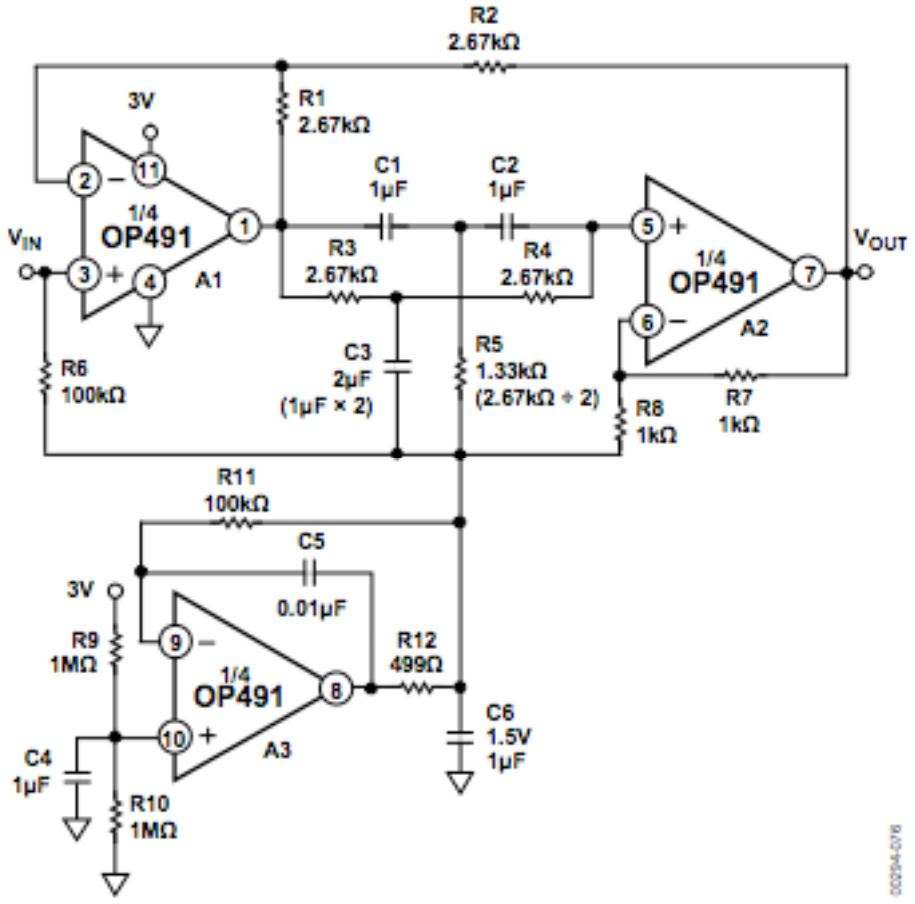

Figure 9 - Single Supply 60Hz Notch Filter with False Ground – picture taken from OP491 datasheet

Component values:

1. R1 = R2 = R3 = R4 = 2.67k
2. R6 = R11 = 100k
3. R7 = R8 = 1k
4. R9 = R10 = 1M
5. R12 = 500R
6. C1 = C2 = C4 = C6 = 1uF
7. C3 = 2uF
8. C5 = 0.01uF

3.5 Microcontroller

The factors influencing the choice of microcontroller are:

1. The inclusion and sampling rate of the analog to digital converter.
2. The power supply levels for the microcontroller.
3. The resolution of the analog to digital converter, i.e. the number of bits available to represent the signal quanta.
4. The opportunity for usage of a USB or RS232 connection for interfacing with the wireless router. This aspect of the project will be discussed in more detail later.

3.5.1 ADC

The choice for the microcontroller hinged on the requirements for the analog to digital converter. Because of this, the hunt was not very difficult, considering that the bandwidth of the analog signal was under 100Hz. According to sampling theorem, a signal must be sampled at or faster than at least the Nyquist rate.

$$f_N \stackrel{\text{def}}{=} 2B$$

In this formula f_N is the Nyquist rate, i.e. as stated above, the minimum sampling rate for an analog signal that is being converted to a digital representation. The B is the bandwidth of said analog signal. As I have described it, the bandwidth of our signal is being conditioned in the analog domain via low pass and high pass filters to restrict it to only contain frequency components above 0Hz and below 50Hz. This makes the bandwidth of our signal be the difference between the lowest and highest frequency components, so in our case it is only 50Hz. Nyquist rate is therefore 100Hz, so we must sample at 100 samples per second. As long as we sample at that rate or above it, we will avoid aliasing (this is a form of signal distortion in which the original signal cannot be accurately and uniquely recovered from the frequency domain representation of said signal). Most microcontrollers analog-digital converters go up to 16 megasamples per

second. That is about 160,000 times as fast as we need it to be, so we are pretty safe in our choice of ADC.

3.5.2 Power supply levels

Since my circuitry is being powered from 0 to 3V, it is a good idea to use a microcontroller that can function on the same power supply.

3.5.3 Resolution

This aspect was also not a big issue, since most ADC's operate with 10 bits, which gives a resolution of about 3mV, which is sufficient for displaying a continuous ECG signal.

In the end I settled on the PIC18F25K20, since it provides each one of the features I touched upon above.

3.5.4 Programming for the ADC

The ECG signal output from the final stage of the analog conditioning circuit was applied to the RA3 (AN3) pin of the microcontroller, and the 10-bit result of the conversion is outputted on ports B and D. Since each port is 8 bits, I had 8 bits on the port C including the LSB, and 2 bits on port D including the MSB. The ADC is configured to use the internal voltage reference of the microcontroller as its reference voltage. Since I was consistent in the design of the analog circuitry, the 0V and 3V reference voltages are being used for the microcontroller as well, so there is no problem using them for the conversion. The result of this code is that the ADC yields a 10-bit binary representation of the data on the AN3 pin, which is the ECG output from the signal conditioning circuit.

At any moment in time, the variable *value* holds the current digital conversion for the corresponding analogue input. This result is what is set up for wireless transmission to the personal electronic device of the patient. Note that the sampling rate was set to 16Mhz, which is significantly beyond the required minimum, but there were no adverse arguments for going lower, so I just went with it. The following code shows how the features described above were set up. This was done in C-language and uploaded to the microcontroller via the programmer that came with it. Now, because the SPI communication to peripheral devices can only transmit a single byte, we have two options.The last line calls the send_Spi function which is written to transmit the byte of data.

```
#include <p18cxxx.h>
#include <delays.h>

// Delay in 1 ms (approximately) for 16 MHz Internal Clock
void delay_ms(unsigned int ms)
{
  do {
    Delay1KTCYx(4);
  } while(--ms);
}
void main(void)
{

unsigned int value;

OSCCON=0x70;        // Select 16 MHz internal clock

  ANSEL = 0b00001000;  // Set PORT AN3 to analog input
  TRISB = 0x3F;        // Port B pins RC6 and RC7 are configured as outputs
  TRISD = 0;               // All port D pins are configured as outputs
```

```
 ANSELH = 0;        // Set PORT AN8 to AN11 as Digital I/O

 /* Init ADC */
 ADCON0=0b00001101;   // ADC port channel 3 (AN3), Enable ADC
 ADCON1=0b00000000;   // Use Internal Voltage Reference (Vdd and Vss)
 ADCON2=0b10101011;   // Right justify result, 12 TAD, Select the FRC for 16 MHz

 for(;;) {
   ADCON0bits.GO=1;
   while (ADCON0bits.GO);   // Wait conversion done
   value=ADRESL;          // Get the 8 bit LSB result
   // PORTB = ADRESL;                /8 LSB's are moved to port B if non-wireless
   value += (ADRESH << 8); // Get the 2 bit MSB result
  //  PORTD = ADRESH;                //2 LSB's are moved to port D if non-wireless

send_Spi (value);

 }
 }}
```

3.5.5 Transmission to wireless module

Now that the 10 bits of digitized information are on the output ports of the microcontroller, I proceed to get them to the miWi wireless module. This form of wireless transmission was chosen for its support by the PIC microcontrollers, as well as for its relative ease of implementation when compared to Zigbee and Bluetooth. It is most suitable for simple, short-range, wireless communication and supports the low-power requirements of battery-operated devices. This made the miWi wireless protocol ideal for the purposes of my design. In my implementation, the following code makes it so that the PIC microcontroller (master) sends data byte to peripheral chip (slave) via SPI. The code

uses SPI library functions SPI1_init() and SPI1_Write. Note that I configured the microcontroller as the master, so the wireless module will be the slave. Connection establishment depends exclusively on the master device, i.e. the microcontroller in this case.

```
Void send_Spi (int value) {
sbit Chip_Select at RC0_bit;            // Peripheral chip_select pin is connected to RC0
sbit Chip_Select_Direction at TRISC0_bit; // TRISC0 bit defines RC0 pin to be input or output

Chip_Select = 0;                    // Select peripheral chip
   Chip_Select_Direction = 0;           // Configure the CS# pin as an output
   SPI1_Init();                     // Initialize SPI module
 SPI1_Write(value);                   // Send value to peripheral chip
}
```

3.5.6 Choice of wireless module

I have chosen to utilize the MRF24J40MA module. This is a 2.4 GHz IEEE 802.15.4 power radio transceiver module. The MRF24J40MA has an integrated PCB antenna, matching circuitry, and supports MiWi™. It effectively and safely connects to the PIC18 microcontroller I'm using via a 4-wire SPI interface and is recognized as an ideal solution for wireless sensor networks.

3.5.7 Setting up and implementing the wireless module

The microchip website provides details on how to go about setting up the wirelss module so that it can interface effectively with the micrcontroller and personal computer. http://www.microchip.com/wwwproducts/Devices.aspx?dDocName=en535967

Chapter 4 - Discussion of Results

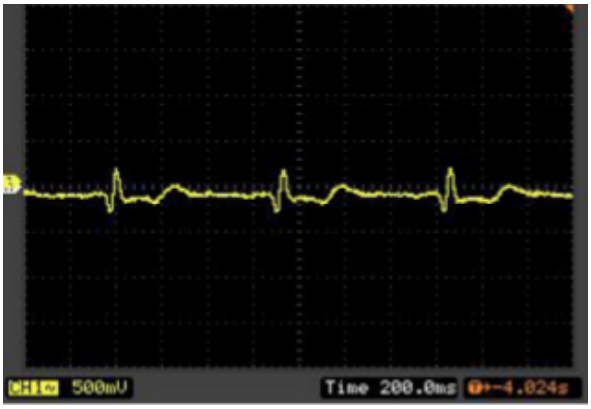

Figure 10 - ECG produced using 2 standard Ag AgCl electrodes directly on the skin

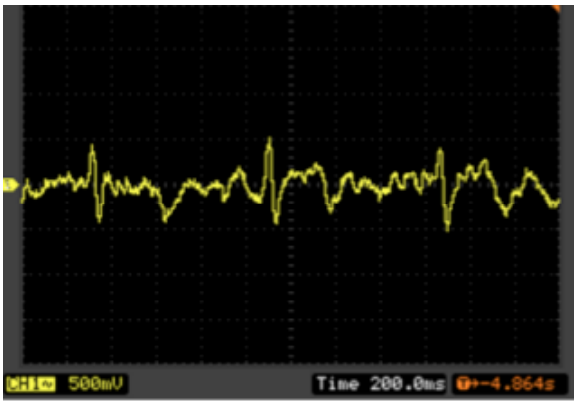

Figure 11 - Example ECG with held breath using the capacitively coupled electrodes through a standard cotton T-shirt

The first waveform is produced using regular precordial leading with 2 silver/silver chloride electrodes. In comparison, the second waveform above is an example of what could be seen in the analog domain on an oscilloscope if the healthy male held were to hold his breath completely and do little or no movement. Once any movement is done,

and even while the patient is relatively still, the waveform distorts further because of heavy motion artifacts and other causes. It is clear that a lot of noises are generated during ECG detection through the cloth. It seems to be difficult to stabilize an ECG pattern by using the developed amplifier.

1. Patient motion -
   Since the output impedance of the sensor is known to have been reasonably high at the headstage, the output ECG signal is very susceptible to motion artifacts. It is clear that motion would affect and contaminate the output of the developed system.
2. Change in contact surface area as the cloth moved relative to the surface of the skin – changes in pressure or changes in position of patient.
3. Change in electrical impedance as the patient sweats, resulting in signal distortion.
4. Electrode surface area had to be minimal so as to minimize bulk, but this adversely affects the strength of the capacitance and thus the quality of the signal.
5. Electromagnetic interference due to the high output impedance of the sensor.

What could be told from the ECG is the heart rate and a few other periodic parameters of the signal. However, note that the ratios of the peaks are highly variable, so they are of scarce diagnostic value to a physician. The distortion is probably due to inconsistent gain through the band pass of the circuitry – i.e. some frequencies in the 0 to 40Hz range were allowed through preferentially. Ideally, all frequencies in that range would go through with equal attenuation so as to preserve their relative amplitudes.

Chapter 5 - Conclusion

On the bright side of things, the system is very non-intrusive, easy to implement and take off and can be worn for long periods of time without skin irritation, etc. In addition, it is powered by a battery, which makes it very portable. Incorporation with the spO2 sensor provides an interesting and useful approach to long-term patient monitoring. These factors come at the expense of signal quality, but I have still been able to preserve some diagnostic characteristics in the time-domain, namely periodic characteristics that are useful for detecting atrial fibrillation, to provide an example. This is, after all, what the project set out to achieve. Several setbacks have been discovered along the way, but the potential for wide clinical application remains evident.

The setbacks outlined in the discussion of the results make it such that the most promising clinical application of this ECG acquisition system appears to be long-term arrhythmia monitoring as a result of disease or medication, for example. Once the obvious limitations are successfully overcome, the system presents a great potential for very long-term monitoring of such patients and their conditions over weeks, months and even years.

Appendix

Overview of the heart

The heart is an organ that is native most animals with circulatory system and its primary function is to get blood through the bodies vessels by contracting repeatedly and rhythmically. It is made up of cardiac muscle, which is involuntary and striated muscle tissue and is housed within a sac called the pericardium. This sac provides protection for the heart and holds down its surrounding structures, preventing the heart from overfilling with blood. The heart is nothing more than a collection of muscle cells grouped together by contiguous cytoplamsic bridges. This way, one cell that is electrically stimulated can pass on the stimulation to neighbouring cells.

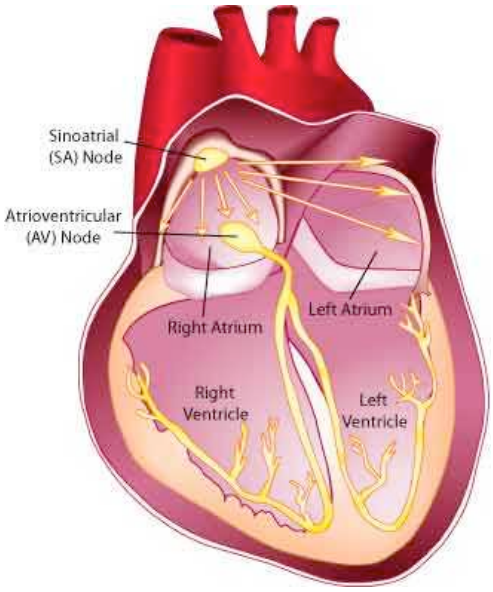

Figure 12 - The physical structure and electrical conduction system of the heart - taken from http://gardenrain.files.wordpress.com/2009/03/electrical-impulses-of-heart.jpg

Electric signal generation and conduction in the heart

The cells in the region of the human heart called the sinoatrial node are all self-excitable. They contact without any signal from the nervous system, even if they are taken out of the heart. The node is responsible for generating electrical impulses, similar to those produced by nerve cells. The impulses spread quickly and cause the atria to contract together. Then the impulses get to another region of cardiac muscle tissue, called the atrioventricular node, which lies in the wall between the right atrium and right ventricle. A delay is imposed on the impulses of about 0.1s before they are allowed to get to the ventricular walls. This is done to allow the atria to be completely emptied before the ventricles contract again. The conduction of signals from the heart apex along the ventricular walls is facilitated by specialized muscle fibers called Purkinje fibers. The entire cycle lasts about 0.8 seconds and the impulses generated during the heart cycle produce electrical currents, which are conducted trough body fluids to the skin, where they can be detected by electrodes and actually recorded as an electrocardiogram. The graphical structure of the electrocardiogram amplitudes and periods relate directly to the events that comprise the heart cycle, from one atrial filling to the next.

The cardiac cycle

The cardiac cycle refers to the collection of events that occur from the beginning of a heart beat to the beginning of the next. First, in late diastole, the semilunar valves close and the atrioventricular vales open so that the whole heart is relaxed. Secondly, the atria begin to contract. While they are contracting the heart is said to be in atrial systole and the atrioventricular valves open and blood flows in from the atrium to the ventricle. Then, once the ventricles are filled, an isovolumic ventricular contraction begins. During this phase, the ventricles begin to contract and the atrioventricular vales close to prevent

backflow from the ventricles to the atrium. Semilunar valves also close to prevent blood entry or loss, so there is effectively no change in volume.

Then in the fourth stage, ventricular ejection begins and blood is pushed out into the bloodstream. In the fifth stage, which is called isovolumic ventricular relaxation, the pressure decrease so that no blood is getting into the ventricles. The ventricles no longer contract and start relaxing. All the while, semilunar valves remain shut because the aortic blood is holding them in that state. This entire cycle is carefully coordinated by the electrical impulse that were discussed above and that come from the atrioventricular node and sinoatrial node of the heart. For healthy patients, all this takes approximately a single second. So the frequency of the heart cycle is therefore just about 1 Hz.

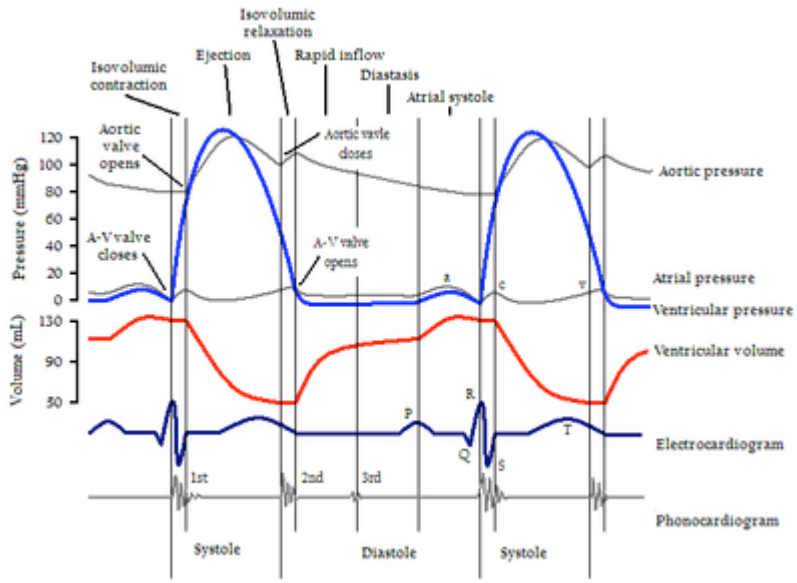

Figure 13 - Figure showing the changes in volume and pressure during the heart cycle - taken from HLTH SCI 2L03 lecture notes.

Atrial systole

This is the contraction of the myocardial of the atria. They usually contract altogether. As the atria contract, electrical activity needs to stimulate the myocardium of

the heart. Electrical systole can be detected on the ECG by looking or the onset of the P wave.

In ventricular systole, the left and right ventricles contract. This can be detected on the ECG by looking for the onset of the QRS complex.

References

[1] Jae Hyuk Shin, Kang Moo Lee and Kwang Suk Park "Non-constrained monitoring of systolic blood pressure on a weighing scale" *Physiol. Meas. 30 679–693*, 2009

[2] Miia Määttälä, Antti Konttila and Esko Alasaarela "Optimum Place for Measuring Pulse Oximeter Signal in Wireless Sensor-Belt or Wrist-Band" *International Conference on Convergence Information Technology,* 2007

[3] Takahiro Asaoka and Kazushige Magatani "ECG Detector by Easy Contact for Helping Efficient Rescue Operation" *IFMBE Proceedings Vol. 23,* 2009

[4] Statistics Canada, Mortality Summary List of Causes 2005. Released March 2009.

[5] Tong Zhang, Simske, S. and Blakley, D. "Scalable ECG Compression for Long-Term Home Health Care Engineering in Medicine and Biology Society" *IEEE-EMBS 27th Annual International Conference of the 2005 390 – 393*, 2005

[6] Anna Gruetzmann, Stefan Hansen and Jorg Muller "Novel dry electrodes for ECG monitoring" *Physiol. Meas. 28 1375–1390*, 2007

[7] Searle A. and Kirkup. J "A direct comparison of wet, dry and insulating bioelectric recording electrodes *Physiol. Meas. 21 271–83*, 2000

[8] P. C. Richardson, "The insulated electrode: A pasteless electrocardiographic technique," *Proc. Annu. Conf. Eng. Med. Biol. 9:15.7* 1968

[9] J. Ottenbacher, L. Jatoba, U. Grobmann, W. Stork, K. Müller-Glaser "ECG electrodes

for a context-aware cardiac permanent monitoring system*" IFMBE Proceedings Vol. 14/2 672-75,* 2008

[10] A Ueno, Y Akabane, A Mizuta, S Kataoka, H Hoshino, and Y Ishiyama "A System for Detecting Electrocardiographic Potential through Underwear Worn by an Infant from Its Dorsal Surface" *IFMBE Proceedings Vol. 14/2 595-98,* 2008

[11] Akinori U, Yuuki S, Yogi I "A Primary Study of indirect ECG Monitor Embedded in a Bed For Home Health Care" *IEEJEISS : Vol.127 No. 10 1792-1799,* 2007

[12] Lin YH, Jan IC, Ko PC, Chen YY, Wong JM, Jan GJ. "A wireless PDA-based physiological monitoring system for patient transport. IEEE Trans ITB." *8(4): 439-447,* 2004

[13] M Oehler, V Ling , K Melhorn and M Schilling "A multichannel portable ECG system with capacitive sensors" *Physiol. Meas. 29 783-79*, 2008

[14] http://www.vitaljacket.com

[15] Padmadinata F Z, Veerhoek J J, Van Dijk G J A and Huijsing J H "Microelectronic skin electrode" *Sensors Actuators* 491–4, 1990