McMaster University
DigitalCommons@McMaster

Open Access Dissertations and Theses | Open Dissertations and Theses

Fall 2012

# BROADCASTING CORRELATED GAUSSIANS

Junfeng Feng
*McMaster University*, junfeng.feng@gmail.com

Follow this and additional works at: http://digitalcommons.mcmaster.ca/opendissertations

Part of the Signal Processing Commons, and the Systems and Communications Commons

Recommended Citation
Feng, Junfeng, "BROADCASTING CORRELATED GAUSSIANS" (2012). *Open Access Dissertations and Theses.* Paper 6994.

This Dissertation is brought to you for free and open access by the Open Dissertations and Theses at DigitalCommons@McMaster. It has been accepted for inclusion in Open Access Dissertations and Theses by an authorized administrator of DigitalCommons@McMaster. For more information, please contact scom@mcmaster.ca.

# Broadcasting Correlated Gaussians

# BROADCASTING CORRELATED GAUSSIANS

BY

JUNFENG FENG, B.Sc.

A THESIS

SUBMITTED TO THE DEPARTMENT OF ELECTRICAL & COMPUTER ENGINEERING

AND THE SCHOOL OF GRADUATE STUDIES

OF MCMASTER UNIVERSITY

IN PARTIAL FULFILMENT OF THE REQUIREMENTS

FOR THE DEGREE OF

MASTER OF APPLIED SCIENCE

© Copyright by Junfeng Feng, May 2012

All Rights Reserved

Master of Applied Science (2012) McMaster University

(Electrical & Computer Engineering) Hamilton, Ontario, Canada

TITLE: Broadcasting Correlated Gaussians

AUTHOR: Junfeng Feng

B.Sc., (Electrical Engineering)

Beijing University of Posts and Telecommunications

Beijing, China

SUPERVISOR: Dr. Jun Chen

NUMBER OF PAGES: xi, 62

*To my parents: Peiming Feng and Xiurong Li*

# Abstract

Broadcasting correlated Gaussians is one of the cases where separate source-channel coding is suboptimal. In this dissertation, we will study the distortion region of sending correlated Gaussian sources over an AWGN-BC using hybrid digital-analog coding approach, where each receiver wishes to reconstruct one source component subject to the mean squared error distortion constraint.

First of all, the problem of transmitting $m$ independent Gaussian source components over an AWGN-BC is studied. We show this problem setup is closely related to broadcasting correlated Gaussian sources with genie-aided receivers. Moreover, the separate source-channel coding approach is proven to be optimal in these setups.

Second, we consider two new scenarios and find the achievable distortion regions for both cases, where three Gaussian source components are sent to three receivers. The difference is that for the first scenario, the first two source components are correlated and they are independent of the third one while for the second scenario, the last two source components are correlated and they are independent of the first one. Inner bounds based on hybrid analog-digital coding and outer bounds based on genie-aided arguments are proposed for both cases and the optimality is proven.

Finally, we study two cases where side information is presented at one receiver. Hybrid analog-digital coding schemes are used and the optimality is proven.

# Acknowledgements

Firstly, I want to thank my supervisor Dr. Jun Chen, who has helped me enormously in the past two years. Thanks goes to him for spending many afternoons teaching me the techniques used in Information Theory, how to do research and many other things. I deeply appreciate his expertise, guidance and the freedom he gave throughout the course of the thesis. All I can say is that I could hardly ask for any more from an advisor.

Secondly, I would like to thank Lin Song for her support and insightful discussions. Besides, I want to thank Cheryl, the graduate administrative assistant, for her help during my study at McMaster University.

Finally, I would like to thank my family members for their support, unconditional love and making my life as enjoyable as I could imagine.

# Abbreviations

| | |
|---|---|
| AWGN-BC | Additive White Gaussian Noise Broadcast Channel |
| DM-BC | Discrete Memoryless Broadcast Channel |
| DPC | Dirty Paper Coding |
| DPI | Data Processing Inequality |
| EPI | Entropy Power Inequality |
| MMSE | Minimum Mean Square Error |

# Contents

**Abstract** **iv**

**Acknowledgements** **v**

**Abbreviations** **vi**

**1 Introduction and Problem Statement** **1**

1.1 Introduction . . . . . 1

1.2 Problem Setup . . . . . 2

1.3 Organization of the Paper . . . . . 4

**2 Broadcasting $m$ Gaussian Source Components** **5**

2.1 Broadcasting $m$ Independent Gaussian Source Components . . . . . 6

2.2 Broadcasting $m$ Correlated Gaussian Source Components with Genie-aided Receivers . . . . . 6

2.3 Connection between the Above Two Problem Setups . . . . . 7

2.3.1 Inner Bound Based on the Superposition Coding Scheme . . . . . 9

2.3.2 Genie-aided Outer Bound . . . . . 11

2.3.3 The Achievable Distortion Region . . . . . 17

2.4 Analog Scheme . . . . . 17

**3 Two Correlated Source Components and One Independent Component 19**

3.1 Compression of Correlated Gaussian Source Components under Individual Distortion Criteria . . . . . 20

3.2 First Two Correlated and Independent of the Third One . . . . . 22

3.2.1 Inner Bound when $S_1 \leftrightarrow \hat{S}_1 \leftrightarrow \hat{S}_{12} \leftrightarrow S_2$ . . . . . 23

3.2.2 Inner Bound when $\hat{S}_1 = a\hat{S}_{12}$ . . . . . 27

3.2.3 Outer Bound . . . . . 29

3.2.4 Achievable Distortion Region when $S_1 \leftrightarrow \hat{S}_1 \leftrightarrow \hat{S}_{12} \leftrightarrow S_2$ . . . . . 33

3.2.5 Achievable Distortion Region when $\hat{S}_1 = a\hat{S}_{12}$ . . . . . 33

3.2.6 Summary . . . . . 33

3.3 Last Two Correlated and Independent of the First One . . . . . 34

3.3.1 Inner Bound when $S_2 \leftrightarrow \hat{S}_2 \leftrightarrow \hat{S}_{23} \leftrightarrow S_3$ . . . . . 34

3.3.2 Inner bound when $\hat{S}_2 = a\hat{S}_{23}$ . . . . . 38

3.3.3 Outer Bound . . . . . 39

3.3.4 Achievable Distortion Region when $S_2 \leftrightarrow \hat{S}_2 \leftrightarrow \hat{S}_{23} \leftrightarrow S_3$ . . . . . 40

3.3.5 Achievable Distortion Region when $\hat{S}_2 = a\hat{S}_{23}$ . . . . . 41

3.3.6 Summary . . . . . 41

**4 Two Correlated Source Components and One Independent Component with Side Information at Receiver 42**

4.1 Third Component with Side Information at Receiver . . . . . 42

4.1.1 Inner Bound when $S_1 \leftrightarrow \hat{S}_1 \leftrightarrow \hat{S}_{12} \leftrightarrow S_2$ . . . . . 44

4.1.2 Inner Bound when $\hat{S}_1 = a\hat{S}_{12}$ . . . . . 46

4.1.3 Outer Bound . . . . . 48
4.1.4 Achievable Distortion Region when $S_1 \leftrightarrow \hat{S}_1 \leftrightarrow \hat{S}_{12} \leftrightarrow S_2$ . . . . . 52
4.1.5 Achievable Distortion Region when $\hat{S}_1 = a\hat{S}_{12}$ . . . . . 52
4.1.6 Summary . . . . . 52
4.2 First Component with Side Information at Receiver . . . . . 53
4.2.1 Inner Bound when $S_2 \leftrightarrow \hat{S}_2 \leftrightarrow \hat{S}_{23} \leftrightarrow S_3$ . . . . . 54
4.2.2 Inner Bound when $\hat{S}_2 = a\hat{S}_{23}$ . . . . . 56
4.2.3 Outer Bound . . . . . 57
4.2.4 Achievable Distortion Region when $S_2 \leftrightarrow \hat{S}_2 \leftrightarrow \hat{S}_{23} \leftrightarrow S_3$ . . . . . 58
4.2.5 Achievable Distortion Region when $\hat{S}_2 = a\hat{S}_{23}$ . . . . . 58
4.2.6 Summary . . . . . 58

**5 Conclusion and Future work** **59**
5.1 Conclusion . . . . . 59
5.2 Future work . . . . . 60

**Bibliography** **61**

# List of Figures


1.1 Broadcasting $m$ Correlated Gaussian Source Components over AWGN-BC 2

2.1 Broadcasting $m$ Gaussian Source Components over an AWGN-BC with Genie-aided Receivers . . . . . 7

3.1 Broadcasting Three Gaussian Source Components over AWGN-BC . . . . 20

3.2 Broadcasting Three Gaussian Source Components over an AWGN-BC when first two are correlated: the Encoder Part . . . . . 24

3.3 Broadcasting Three Gaussian Source Components over an AWGN-BC when first two are correlated: the Decoder Part . . . . . 26

3.4 Broadcasting Three Gaussian Source Components over AWGN-BC with Genie-aided Receivers . . . . . 29

3.5 Broadcasting Three Gaussian Source Components over an AWGN-BC when last two are correlated: the Encoder Part . . . . . 35

3.6 Broadcasting Three Gaussian Source Components over an AWGN-BC when last two are correlated: the Decoder Part . . . . . 36

4.1 Broadcasting Three Gaussian Source Components over AWGN-BC with Side Information at Receiver when first two are correlated . . . . . 43

4.2 Broadcasting Three Gaussian Source Components over AWGN-BC with Side Information at Receiver: the Encoder Part . . . . . 44

4.3 Broadcasting Three Gaussian Source Components over AWGN-BC with Side Information at Receiver: the Decoder Part . . . . . 45
4.4 Broadcasting Three Gaussian Source Components over AWGN-BC with Genie-aided receiver with Side Information at Receiver . . . . . 49
4.5 Broadcasting Three Gaussian Source Components over AWGN-BC with Side Information at Receiver when last two are correlated . . . . . 53
4.6 Broadcasting Three Gaussian Source Components over AWGN-BC with Side Information at Receiver: the Encoder Part . . . . . 54
4.7 Broadcasting Three Gaussian Source Components over AWGN-BC with Side Information at Receiver: the Decoder Part . . . . . 55

# Chapter 1

# Introduction and Problem Statement

## 1.1 Introduction

In the seminal work [1], Shannon proved that separate source-channel coding is optimal for point-to-point communication. In other words, joint source-channel coding does not improve the performance. This theorem greatly reduces the complexity of communication system engineering, i.e., source coding and channel coding can be studied and implemented independently of each other.

However, for most network information theory problem setups, separate source-channel coding is not optimal. One example is broadcasting a correlated bivariate Gaussian source over an AWGN-BC and each decoder wishes to reconstruct only one source component. [2] shows that the uncoded scheme is optimal for certain signal-to-noise ratios. Tian *et al.* characterize the complete distortion region in [3], which shows that hybrid coding is needed to achieve the distortion region. Here we will study broadcasting a correlated multivariate Gaussian source over AWGN-BC and determine the distortion region under certain conditions.

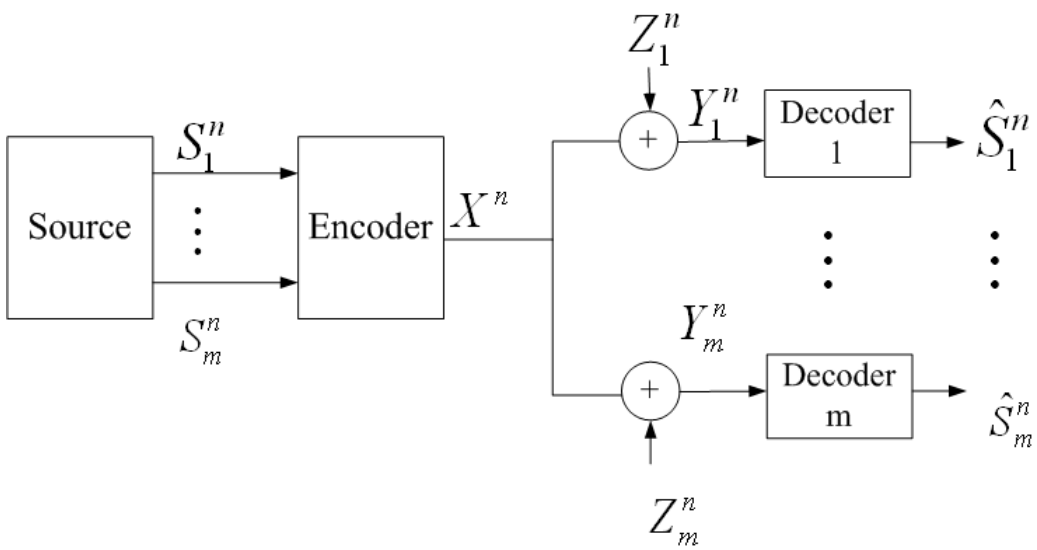


Figure 1.1: Broadcasting $m$ Correlated Gaussian Source Components over AWGN-BC

## 1.2 Problem Setup

Let $S = (S_1, S_2, ..., S_m)$ be a zero-mean Gaussian source with the following covariance matrix:

$$\Sigma_S = \begin{pmatrix} \sigma^2 & \rho_{12}\sigma^2 & \cdots & \rho_{1m}\sigma^2 \\ \rho_{21}\sigma^2 & \sigma^2 & \cdots & \rho_{2m}\sigma^2 \\ \vdots & \vdots & \ddots & \vdots \\ \rho_{m1}\sigma^2 & \rho_{m2}\sigma^2 & \cdots & \sigma^2 \end{pmatrix}.$$

It is to be transmitted over an AWGN-BC to $m$ receivers, where $Y_i$ is the channel output at the $i-$th receiver. The setup is illustrated in Figure 1.1. The AWGN-BC is given by

$$Y_k(i) = X(i) + Z_k(i), k = 1, 2, ..., m, \tag{1.1}$$

where $Z_k(i)$ is i.i.d. Gaussian noise with variance $N_k$. Without loss of generality, we shall assume $N_1 < N_2 < ... < N_m$.

The encoding function $f(.)$ maps the Gaussian source components $S_1^n, S_2^n, ..., S_m^n$ to the channel input $X^n$ (Note: $S_k^n$ here stands for $(S_k(1), S_k(2), ..., S_k(n))$, where $k = 1, 2, ..., m$):

$$X^n = f^{(n)}(S_1^n, S_2^n, ..., S_m^n). \tag{1.2}$$

The channel input $X^n$ needs to satisfy the average power constraint:

$$\frac{1}{n}\sum_{i=1}^{n} E[X(i)^2] \leq P, \tag{1.3}$$

where $E(.)$ stands for the expectation operator.

The decoder at receiver $k$ reconstructs $S_k^n$ based on the received signal $Y_k^n$, i.e.

$$\hat{S}_k^n = \phi_k^{(n)}(Y_k^n), k \in [1, 2, ..., m], \tag{1.4}$$

where $\phi_k(.)$ is the decoding function at receiver $k$. The mean squared error distortion measure is used:

$$d_k = d(S_k^n, \hat{S}_k^n) = E[\frac{1}{n}\sum_{i=1}^{n}(S_k(i) - \hat{S}_k(i))^2], k \in [1, 2, ..., m]. \tag{1.5}$$

**Distortion Region**: A distortion vector $(D_1, D_2, ..., D_m)$ is achievable subject to power constraint $P$, if for any $\varepsilon > 0$ and sufficiently large $n$, we have $D_k + \varepsilon > d_k$, where $k = 1, 2, ..., m$. The set of all achievable distortion vectors $(D_1, D_2, ..., D_m)$ is called the distortion region.

## 1.3 Organization of the Paper

In this dissertation, we will study the achievable distortion region of broadcasting correlated Gaussian sources over an AWGN-BC. The rest of the dissertation is divided into three major parts.

In Chapter 2, we study the problem of broadcasting $m$ independent Gaussian source components over an AWGN-BC. In particular, this problem setup is closely related to broadcasting correlated Gaussian sources over an AWGN-BC with genie-aided receivers. The separate source-channel coding approach is proved to be optimal, where we first quantize the Gaussian source components and then use the superposition coding.

In Chapter 3, we consider two new scenarios and find the achievable distortion regions for both cases. In both scenarios, we send three Gaussian source components to three receivers and each receiver is only interested in reconstructing one corresponding source component. The difference between the two scenarios is that for the first scenario, the first two source components are correlated and they are independent of the third one while for the second scenario, the last two source components are correlated and they are independent of the first one. Inner bounds based on the hybrid coding approach and outer bounds based on genie-aided arguments are derived for both cases and the optimality is proven.

In Chapter 4, we study two cases where side information is presented at one receiver. Hybrid coding schemes are provided and the achievable distortion regions are chacterized.

Finally, in Chapter 5, we summarize the main result of the thesis and discuss some potential directions for the future work.

# Chapter 2

# Broadcasting $m$ Gaussian Source Components

In this chapter, we will study the problem of broadcasting $m$ Gaussian source components. More specifically, we will study two problem setups, one is broadcasting $m$ independent Gaussian source components, and the other is broadcasting $m$ correlated Gaussian source components with genie-aided receivers. We will establish the achievable distortion regions for both problem setups and discuss their relationships.

## 2.1 Broadcasting $m$ Independent Gaussian Source Components

Consider a memoryless and stationary Gaussian source with $m$ independent components $S_1(i), S_2(i), ..., S_m(i)$ of zero mean and the following covariance matrix:

$$\Sigma_S = \begin{pmatrix} \sigma_1^2 & 0 & \cdots & 0 \\ 0 & \sigma_2^2 & \cdots & 0 \\ \vdots & \vdots & \ddots & \vdots \\ 0 & 0 & \cdots & \sigma_m^2 \end{pmatrix}.$$

We are interested in the distortion region of broadcasting these $m$ independent components over an AWGN-BC, which is a special case of the problem setup described in Chapter 1.

## 2.2 Broadcasting $m$ Correlated Gaussian Source Components with Genie-aided Receivers

In the problem setup, we have a memoryless and stationary Gaussian source with zero mean and $m$ correlated source components with the following covariance matrix:

$$\Sigma_S = \begin{pmatrix} \sigma^2 & \rho_{12}\sigma^2 & \cdots & \rho_{1m}\sigma^2 \\ \rho_{21}\sigma^2 & \sigma^2 & \cdots & \rho_{2m}\sigma^2 \\ \vdots & \vdots & \ddots & \vdots \\ \rho_{m1}\sigma^2 & \rho_{m2}\sigma^2 & \cdots & \sigma^2 \end{pmatrix}.$$

The setup is shown in Figure 2.1. As shown in the figure, $S_i, S_{i+1}, ..., S_m$ are provided

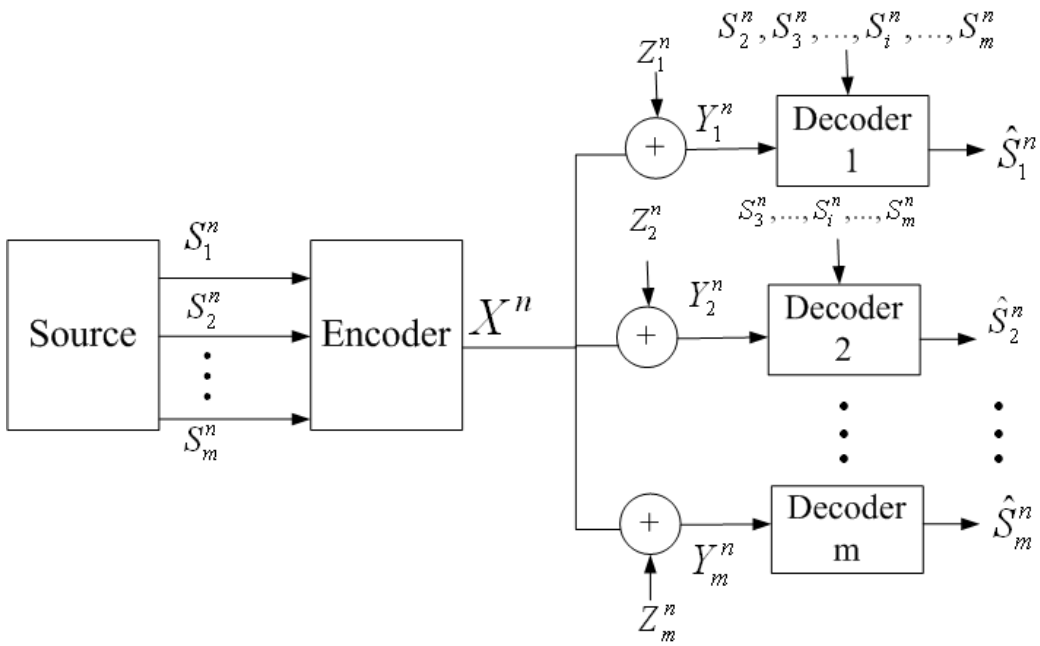


Figure 2.1: Broadcasting $m$ Gaussian Source Components over an AWGN-BC with Genie-aided Receivers

to receiver $i$ as side information. For example, $S_2^n, S_3^n, ..., S_m^n$ are given to receiver 1, and $S_3^n, ..., S_m^n$ is provided to receiver 2, etc.

## 2.3 Connection between the Above Two Problem Setups

In this section, we shall show the above two problem setups are essentially equivalent. Suppose $\hat{S}_1^n, \hat{S}_2^n, ..., \hat{S}_m^n$ are the reconstruction of $S_1^n, S_2^n, ..., S_m^n$ at the corresponding receivers and $(D_1, D_2, ..., D_m)$ is the achievable distortion vector. Before we proceed, we define the following variables:

$$\delta_1 = S_1 - E[S_1|S_2, S_3, ..., S_m],$$

$$\delta_2 = S_2 - E[S_2|S_3, ..., S_m],$$

$$\vdots$$

$$\delta_{m-1} = S_{m-1} - E[S_{m-1}|S_m],$$

$$\delta_m = S_m. \tag{2.1}$$

Then we define the following variables:

$$\hat{\delta}_1 = \hat{S}_1 - E[S_1|S_2, S_3..., S_m],$$

$$\hat{\delta}_2 = \hat{S}_2 - E[S_2|S_3..., S_m],$$

$$\vdots$$

$$\hat{\delta}_{m-1} = \hat{S}_{m-1} - E[S_{m-1}|S_m],$$

$$\hat{\delta}_m = \hat{S}_m. \tag{2.2}$$

We can see that $\delta_1, \delta_2, ..., \delta_{m-1}, S_m$ are independent. Moreover,

$$\begin{aligned} D_{\delta_1} &= E[(\delta_1 - \hat{\delta}_1)^2] \\ &= E[(S_1 - E[S_1|S_2, S_3] - \hat{S}_1 + E[S_1|S_2, S_3])^2] \\ &= E[(S_1 - \hat{S}_1)^2] \\ &= D_1. \end{aligned} \tag{2.3}$$

Similarly, we have

$$D_{\delta_i} = D_i, \tag{2.4}$$

where $i = 2, ..., m-1$.

For $S_m$, there is no change and $D_m$ remains the same.

Therefore, for any achievable distortion vector $(D_1, D_2, ..., D_m)$ based on $S_1^n, S_2^n, ..., S_m^n$, we can achieve the same distortion vector by transmitting $m$ independent Gaussian source components $\delta_1, \delta_2, ..., \delta_{m-1}, S_m$.

### 2.3.1 Inner Bound Based on the Superposition Coding Scheme

According to the preceding discussion, for any achievable distortion vector $(D_1, D_2, ..., D_m)$ based on $S_1^n, S_2^n, ..., S_m^n$, we can achieve the same distortion vector by transmitting $m$ independent Gaussian source components $\delta_1, \delta_2, ..., \delta_{m-1}, S_m$. We will derive an inner bound of the distortion region for the independent source component setup, which is also an inner bound of the distortion region for the correlated source component setup.

The coding scheme includes two parts. First, the source components are quantized based on the lossy source coding scheme. Second, we use the superposition coding scheme to encode the quantized information to send over the AWGN-BC. The details are as follows:

First of all, the Gaussian source components $\delta_1, \delta_2, ..., \delta_{m-1}, S_m$ are quantized into $\hat{\delta}_1, \hat{\delta}_2, ..., \hat{\delta}_{m-1}, \hat{S}_m$ with corresponding distortions $(D_{1|2,3,...,m}, D_{2|3,...,m}, ..., D_{m-1|m}, D_m)$ at rates $R_1, R_2, ..., R_m$. We have

$$R_i = \frac{1}{2} \log \frac{\sigma_{\delta_i}^2}{D_{i|i+1,...,m}}, \tag{2.5}$$

where $i \in [1:m]$ and $0 < D_{i|i+1,...,m} \leq \sigma^2_{\delta_i}$. Then the quantized Gaussian source components are broadcasted over the channel following the superposition coding approach.

According to [4], an $m$-receiver DM-BC $(X, p(y_1, y_2, ..., y_m|x), Y_1 \times Y_2 \times \cdots Y_m)$, is physically degraded if $X \leftrightarrow Y_1 \leftrightarrow Y_2 \leftrightarrow \cdots \leftrightarrow Y_m$ form a Markov chain. The private message capacity region is the set of rate tuples $(R_1, R_2, ..., R_m)$ such that

$$R_1 \leq I(X; Y_1|U_2),$$

$$R_i \leq I(U_i; Y_i|U_{i+1}), i \in [2:m]$$

for some $p(u_m, u_{m-1})p(u_{m-2}|u_{m-1}) \cdots p(u_1|u_2)p(x)$ and $U_{m+1} = \phi$. Note that the theorem also applies to the AWGN-BC.

For the Gaussian case, we use superposition coding and let $u_i \sim N(0, \alpha_i P)$ for $i \in [1:m]$ and they are independent of each other, where $\alpha_1, \alpha_2, ..., \alpha_m \in [0, 1]$ and $\alpha_1 + \alpha_2 + ... + \alpha_m = 1$. We transmit $X = \sum_{i=1}^m u_i \sim N(0, P)$. Let $U_i = (u_i, u_{i+1}, ..., u_m)$ and plug in the theorem above, we could get

$$R_1 \leq \frac{1}{2}\log(1 + \frac{\alpha_1 P}{N_1}),$$

$$R_2 \leq \frac{1}{2}\log(1 + \frac{\alpha_2 P}{\alpha_1 P + N_2}),$$

$$\vdots$$

$$R_i \leq \frac{1}{2}\log(1 + \frac{\alpha_i P}{(\alpha_1 + \alpha_2 + ... + \alpha_{i-1})P + N_i}),$$

$$\vdots$$

$$R_m \leq \frac{1}{2}\log(1+\frac{\alpha_m P}{(\alpha_1+\alpha_2+...+\alpha_{m-1})P+N_m}). \tag{2.6}$$

Combining (2.5) and (2.6) together, we could get

$$\frac{1}{2}\log\frac{\sigma^2_{\Delta_1}}{D_{1|2,3,...,m}} \leq \frac{1}{2}\log(1+\frac{\alpha_1 P}{N_1})$$

$$\frac{1}{2}\log\frac{\sigma^2_{\Delta_2}}{D_{2|3,...,m}} \leq \frac{1}{2}\log(1+\frac{\alpha_2 P}{\alpha_1 P+N_2})$$

$$\vdots$$

$$\frac{1}{2}\log\frac{\sigma^2_{\Delta_i}}{D_{i|i+1,...,m}} \leq \frac{1}{2}\log(1+\frac{\alpha_i P}{(\alpha_1+\alpha_2+...+\alpha_{i-1})P+N_i})$$

$$\vdots$$

$$\frac{1}{2}\log\frac{\sigma^2_{\Delta_m}}{D_m} \leq \frac{1}{2}\log(1+\frac{\alpha_m P}{(\alpha_1+\alpha_2+...+\alpha_{m-1})P+N_m}), \tag{2.7}$$

where $\alpha_1, \alpha_2, ..., \alpha_m \in [0,1]$ and $\alpha_1+\alpha_2+...+\alpha_m = 1$.

### 2.3.2 Genie-aided Outer Bound

In this section, we derive the genie-aided outer bound for broadcasting $m$ correlated Gaussian source components. The proof is similar to [5] and the result is given in the following lemma.

**Lemma 2.1**: The distortion region of broadcasting correlated Gaussian source components is bounded by:

$$\frac{n}{2}\log\frac{\sigma^2_{\Delta_1}}{D_{1|2,3,...,m}} \leq \frac{n}{2}\log(1+\frac{\alpha_1 P}{N_1})$$

$$\frac{n}{2}\log\frac{\sigma^2_{\Delta_2}}{D_{2|3,...,m}} \leq \frac{n}{2}\log(1+\frac{\alpha_2 P}{\alpha_1 P + N_2})$$

$$\vdots$$

$$\frac{n}{2}\log\frac{\sigma^2_{\Delta_i}}{D_{i|i+1,...,m}} \leq \frac{n}{2}\log(1+\frac{\alpha_i P}{(\alpha_1+\alpha_2+...+\alpha_{i-1})P + N_i})$$

$$\vdots$$

$$\frac{n}{2}\log\frac{\sigma^2_{\Delta_m}}{D_m} \leq \frac{n}{2}\log(1+\frac{\alpha_m P}{(\alpha_1+\alpha_2+...+\alpha_{m-1})P + N_m}), \tag{2.8}$$

where $\alpha_1, \alpha_2, ..., \alpha_m \in [0,1]$ and $\alpha_1+\alpha_2+...+\alpha_m = 1$.

**Proof**: For $S_1^n$, we have

$$\frac{n}{2}\log\frac{\sigma^2_{\Delta_1}}{D_{1|2,3,...,m}} \leq I(S_1^n;\hat{S}_1^n|S_2^n,S_3^n,...,S_m^n), \tag{2.9}$$

where $\Delta_1 = S_1 - E[S_1|S_2,S_3,...,S_m]$ and $D_{1|2,3,...,m}$ denotes the distortion of $S_1^n$ when $S_2^n, S_3^n, ..., S_m^n$ are given at Receiver 1. Note that

$$RHS = I(S_1^n;\hat{S}_1^n|S_2^n,S_3^n,...,S_m^n) \leq I(S_1^n;Y_1^n|S_2^n,S_3^n,...,S_m^n), \tag{2.10}$$

which follows by the DPI. We have

$$\begin{aligned} I(S_1^n;Y_1^n|S_2^n,S_3^n,...,S_m^n) &= h(Y_1^n|S_2^n,S_3^n,...,S_m^n) - h(Y_1^n|S_1^n,S_2^n,S_3^n,...,S_m^n) \\ &= h(Y_1^n|S_2^n,S_3^n,...,S_m^n) - h(Z_1^n) \\ &= h(Y_1^n|S_2^n,S_3^n,...,S_m^n) - \frac{n}{2}\log(2\pi e N_1). \end{aligned} \tag{2.11}$$

Note that

$$\begin{aligned}\frac{n}{2}\log(2\pi e N_1) &= h(Z_1^n)\\ &= h(Y_1^n|S_1^n, S_2^n, S_3^n, ..., S_m^n)\\ &\leq h(Y_1^n|S_2^n, S_3^n, ..., S_m^n)\\ &\leq h(Y_1^n)\\ &\leq \frac{n}{2}\log 2\pi e(P+N_1), \end{aligned} \tag{2.12}$$

which follows the property of differential entropy and conditional differential entropy. Hence, there exists $\alpha_1 \in [0,1]$ such that $h(Y_1^n|S_2^n, S_3^n, ..., S_m^n) = \frac{n}{2}\log(2\pi e(\alpha_1 P + N_1))$. Therefore, we get

$$\frac{n}{2}\log\frac{\sigma^2_{\Delta_1}}{D_{1|2,3,...,m}} \leq \frac{n}{2}\log(1+\frac{\alpha_1 P}{N_1}). \tag{2.13}$$

For $S_2^n$, we have

$$\frac{n}{2}\log\frac{\sigma^2_{\Delta_2}}{D_{2|3,...,m}} \leq I(S_2^n; \hat{S}_2^n|S_3^n, ..., S_m^n), \tag{2.14}$$

where $\Delta_2 = S_2 - E[S_2|S_3, ..., S_m^n]$ and $D_{2|3,...,m}$ denotes the distortion of $S_2^n$ when $S_3^n, ..., S_m^n$ are given at Receiver 2.

$$I(S_2^n; \hat{S}_2^n|S_3^n, ..., S_m^n) \leq I(S_2^n; Y_2^n|S_3^n, ..., S_m^n), \tag{2.15}$$

which follows by the DPI. And

$$RHS = I(S_2^n; Y_2^n | S_3^n, ..., S_m^n) = h(Y_2^n | S_3^n, ..., S_m^n) - h(Y_2^n | S_2^n, S_3^n, ..., S_m^n). \tag{2.16}$$

With no loss of generality, we can assume that the AWGN-BC is physically degraded. As a consequence, we can write $Y_2^n = Y_1^n + \tilde{Z}_1^n$. and the variance of each component of $\tilde{Z}_1^n$ is $N_2 - N_1$. Following the conditional EPI, we have

$$\begin{aligned} 2^{2h(Y_2^n|S_2^n,S_3^n,...,S_m^n)/n} &= 2^{2h(Y_1^n+\tilde{Z}_1^n|S_2^n,S_3^n,...,S_m^n)/n} \\ &\geq 2^{2h(Y_1^n|S_2^n,S_3^n,...,S_m^n)/n} + 2^{2h(\tilde{Z}_1^n|S_2^n,S_3^n,...,S_m^n)/n}. \end{aligned} \tag{2.17}$$

Plug in $h(Y_1^n|S_2^n, S_3^n, ..., S_m^n) = \frac{n}{2}\log(2\pi e(\alpha_1 P + N_1))$, we could get

$$h(Y_2^n|S_2^n, S_3^n, ..., S_m^n) \geq \frac{n}{2}\log(2\pi e(\alpha_1 P + N_2)).$$

Besides, we have

$$\begin{aligned} \frac{n}{2}\log(2\pi e(\alpha_1 P + N_2)) &\leq h(Y_2^n|S_2^n, S_3^n, ..., S_m^n) \\ &\leq h(Y_2^n) \\ &\leq \frac{n}{2}\log(2\pi e(P + N_2)). \end{aligned} \tag{2.18}$$

Therefore, $\exists \alpha_2 \in [0, 1]$, s.t. $h(Y_2^n|S_3^n, ..., S_m^n) = \frac{n}{2}\log(2\pi e((\alpha_1 + \alpha_2)P + N_2))$.

Taking all these equations into account, we have

$$\frac{n}{2}\log\frac{\sigma_{\Delta_2}^2}{D_{2|3,...,m}} \leq \frac{n}{2}\log(1 + \frac{\alpha_2 P}{\alpha_1 P + N_2}). \tag{2.19}$$

Similar to $S_2^n$, for $S_i^n$ and any $i \in [3 : m-1]$, we have

$$\frac{n}{2} \log \frac{\sigma^2_{\Delta_i}}{D_{i|i+1,...,m}} \leq I(S_i^n; \hat{S}_i^n | S_{i+1}^n, ..., S_m^n), \tag{2.20}$$

where $\Delta_i = S_i - E[S_i|S_{i+1}, ..., S_m]$ and $D_{i|i+1,...,m}$ denotes the distortion of $S_i^n$ when $S_{i+1}^n, ..., S_m^n$ are given at Receiver i. By the DPI,

$$I(S_i^n; \hat{S}_i^n | S_{i+1}^n, ..., S_m^n) \leq I(S_i^n; Y_i^n | S_{i+1}^n, ..., S_m^n). \tag{2.21}$$

Moreover,

$$RHS = I(S_i^n; Y_i^n | S_{i+1}^n, ..., S_m^n) = h(Y_i^n | S_{i+1}^n, ..., S_m^n) - h(Y_i^n | S_i^n, S_{i+1}^n, ..., S_m^n). \tag{2.22}$$

We can write $Y_i^n = Y_{i-1}^n + \tilde{Z}_{i-1}^n$ and the variance of $\tilde{Z}_{i-1}^n$ is $N_i - N_{i-1}$.

Using the inductive approach, we assume that $h(Y_{i-1}^n | S_i^n, S_{i+1}^n, ..., S_m^n) = \frac{n}{2} \log(2\pi e((\alpha_1 + ... + \alpha_{i-1})P + N_{i-1}))$, for any $i \in [3 : m-1]$. Following the conditional EPI, we have

$$\begin{aligned} 2^{2h(Y_i^n | S_i^n, S_{i+1}^n, ..., S_m^n)/n} &= 2^{2h(Y_{i-1}^n + \tilde{Z}_{i-1}^n | S_i^n, S_{i+1}^n, ..., S_m^n)/n} \\ &\geq 2^{2h(Y_{i-1}^n | S_i^n, S_{i+1}^n, ..., S_m^n)/n} + 2^{2h(\tilde{Z}_{i-1}^n | S_i^n, S_{i+1}^n, ..., S_m^n)/n}. \end{aligned} \tag{2.23}$$

Plug in $h(Y_{i-1}^n | S_i^n, S_{i+1}^n, ..., S_m^n) = \frac{n}{2} \log(2\pi e((\alpha_1 + ... + \alpha_{i-1})P + N_{i-1}))$, we could get

$h(Y_i^n|S_i^n, S_{i+1}^n, ..., S_m^n) \geq \frac{n}{2}\log(2\pi e((\alpha_1 + ... + \alpha_{i-1})P + N_i))$. Besides, we have

$$\begin{aligned}\frac{n}{2}\log(2\pi e((\alpha_1 + ... + \alpha_{i-1})P + N_i)) &\leq h(Y_i^n|S_i^n, S_{i-1}^n, ..., S_m^n) \\ &\leq h(Y_i^n) \\ &\leq \frac{n}{2}\log(2\pi e(P + N_i)). \end{aligned} \tag{2.24}$$

Hence, $\exists \alpha_i \in [0, 1]$, s.t. $h(Y_i^n|S_{i+1}^n, ..., S_m^n) = \frac{n}{2}\log(2\pi e((\alpha_1 + ... + \alpha_i)P + N_i))$.

Taking all these equations into account, we have

$$\frac{n}{2}\log\frac{\sigma^2_{\Delta_i}}{D_{i|i+1,...,m}} \leq \frac{n}{2}\log(1 + \frac{\alpha_i P}{(\alpha_1 + ... + \alpha_{i-1})P + N_i}), \tag{2.25}$$

which holds for any $i \in [3 : m - 1]$.

Finally, for the last source component $S_m^n$, we have

$$\frac{n}{2}\log(\frac{\sigma^2_{S_m}}{D_m}) \leq I(S_m^n; \hat{S}_m^n). \tag{2.26}$$

Using the DPI, we can get

$$I(S_m^n; \hat{S}_m^n) \leq I(S_m^n; Y_m^n). \tag{2.27}$$

Note that $RHS = I(S_m^n; Y_m^n) = h(Y_m^n) - h(Y_m^n|S_m^n) \leq \frac{n}{2}\log(2\pi e(P + N_m)) - h(Y_m^n|S_m^n)$. Now write $Y_m^n = Y_{m-1}^n + \tilde{Z}_m^n$. By the conditional EPI, we have

$$2^{2h(Y_m^n|S_m^n)/n} = 2^{2h(Y_{m-1}^n|S_m^n)/n} + 2^{2h(\tilde{Z}_m^n|S_m^n)/n}, \tag{2.28}$$

Then we get $h(Y_m^n|S_m^n) \geq \frac{n}{2}\log(2\pi e((\alpha_1+\alpha_2+...+\alpha_{m-1})P+N_m))$, and

$$RHS = \frac{n}{2}\log(1+\frac{(1-\alpha_1-\alpha_2-...-\alpha_{m-1})P}{(\alpha_1+\alpha_2+...+\alpha_{m-1})P+N_m}). \tag{2.29}$$

Taking all these equations into account, we have

$$\frac{n}{2}\log\frac{\sigma^2_{\Delta_m}}{D_m} \leq \frac{n}{2}\log(1+\frac{\alpha_m P}{(\alpha_1+\alpha_2+...+\alpha_{m-1})P+N_m}), \tag{2.30}$$

where $\alpha_m = 1-\alpha_1-\alpha_2-...-\alpha_{m-1}$, which gives an outer bound of the distortion region.

### 2.3.3 The Achievable Distortion Region

From the preceding sections, one could easily see that the inner bound meets the outer bound. To sum up, we have shown that the coding scheme described above is optimal and the achievable distortion region for the above two problem setups is determined. In addition, separate source-channel coding is shown to be optimal. Besides, by changing the values of $\alpha_1, \alpha_2, ..., \alpha_m$, we could get the tradeoff between different distortion components.

## 2.4 Analog Scheme

In this section, we will consider the analog scheme for broadcasting correlated Gaussian source over an AWGN-BC. Note that genie is not provided at receiver side. Suppose we transmit:

$$X(j) = \tilde{\alpha}(a_1S_1(j)+a_2S_2(j)+...+a_iS_i(j)+...+a_mS_m(j)) = \tilde{\alpha}\sum_{i=1}^{m} a_iS_i(j), \tag{2.31}$$

where $\tilde{\alpha} = \sqrt{\frac{P}{Var(\sum_{i=1}^{m} a_i S_i(j))}}$ and $a_i \geq 0$.

At receiver $i$, $Y_i(j) = X(j) + Z_i(j)$, where $i = 1, ..., m$, MMSE estimation is used to reconstruct the corresponding source components. From the problem setup, we know that all the source components are i.i.d., the distortion for a length-$n$ sequence is equal to that of a single component. Then the distortion for reconstructing $S_i$ at receiver $i$ is:

$$\begin{aligned}
D_i &= E[\frac{1}{n}\sum_{j=1}^{n}(S_i(j) - \hat{S_i}(j))^2] \\
&= E[\frac{1}{n}\sum_{j=1}^{n}(S_i(j) - E[S_i(j)|Y_i(j)])^2] \\
&= E[(S_i - E[S_i|Y_i])^2] \\
&= E[S_i^2 + E[S_i|Y_i]^2 - 2S_i E[S_i|Y_i]] \\
&= E[S_i^2 + (K_{S_iY_i}K_{Y_i}^{-1})^2 Y_i^2 - 2S_i K_{S_iY_i}K_{Y_i}^{-1}Y_i] \\
&= \sigma_i^2 + (K_{S_iY_i}K_{Y_i}^{-1})^2 E[Y_i^2] - 2K_{S_iY_i}K_{Y_i}^{-1}E[S_iY_i] \\
&= \sigma_i^2 - \frac{K_{S_iY_i}^2}{P + N_i} \\
&= \sigma_i^2 - \frac{\tilde{\alpha}^2(\sum_{j=1}^{m} a_j \rho_{ij}\sigma_i\sigma_j)^2}{P + N_i},
\end{aligned} \tag{2.32}$$

where $i = 1, 2, ..., m$. This is the achievable distortion region for the analog scheme, which is not optimal in general.

# Chapter 3

# Two Correlated Source Components and One Independent Component

In this chapter, we will study two special problem setups of broadcasting three Gaussian source components over an AWGN-BC. In both cases, there are two correlated source components, which are independent of the remaining one.

The problem setup for broadcasting three Gaussian source components to three receivers is illustrated in Figure 3.1. We shall derive the achievable distortion regions of two special cases of the problem setup and Wyner-Ziv coding in [6] and dirty paper coding in [7] are used.

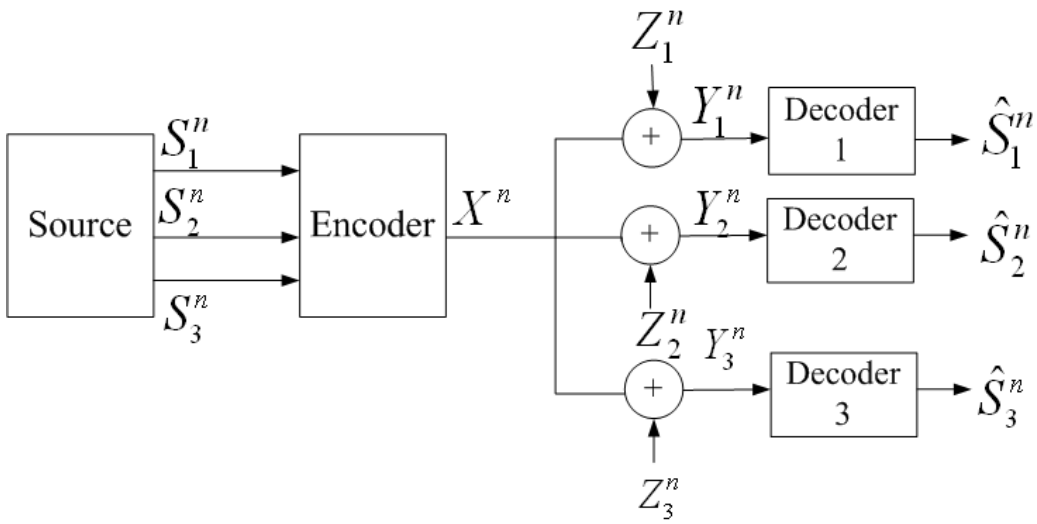


Figure 3.1: Broadcasting Three Gaussian Source Components over AWGN-BC

## 3.1 Compression of Correlated Gaussian Source Components under Individual Distortion Criteria

Jinjun Xiao and Zhiquan Luo [8] study the problem of compressing correlated Gaussian source vector $S = (S_1, S_2, ..., S_m)$ into $\hat{S} = (\hat{S}_1, \hat{S}_2, ..., \hat{S}_m)$ with individual distortion criteria for each source component. The rate-distortion function $R_{S_1,S_2,...,S_m}(D_1, D_2, ..., D_m)$ is the solution of

$$\min I(S; \hat{S})$$
$$\text{s.t. } E(|S_i - \hat{S}_i|^2) \leq D_i, \text{ for all } 1 \leq i \leq m.$$

for some $p(\hat{S}_1, \hat{S}_2, ..., \hat{S}_m | S_1, S_2, ..., S_m)$. In addition, distortion covariance matrix $\Sigma_D$ could be obtained from this result.

Moreover, for $m = 2$, the authors give an explicit result (Theorem 6 in [8]) of the rate-distortion function, where the source covariance matrix is

$$\Sigma_S = \begin{pmatrix} \sigma^2 & \rho\sigma^2 \\ \rho\sigma^2 & \sigma^2 \end{pmatrix}.$$

The resulting distortion covariance matrix is as follows:

(1) If $\rho^2 \geq \frac{\sigma^2-D_2}{\sigma^2-D_1}$, then the distortion matrix is $\Sigma_D = \begin{pmatrix} D_1 & \rho D_1 \\ \rho D_1 & \sigma^2 - \rho^2(\sigma^2 - D_1) \end{pmatrix}$.

(2) If $\rho^2 \leq \frac{(\sigma^2-D_1)(\sigma^2-D_2)}{\sigma^4}$, then the distortion matrix is $\Sigma_D = \begin{pmatrix} D_1 & 0 \\ 0 & D_2 \end{pmatrix}$.

(3) If $\frac{(\sigma^2-D_1)(\sigma^2-D_2)}{\sigma^4} \leq \rho^2 \leq \frac{\sigma^2-D_2}{\sigma^2-D_1}$, then the distortion matrix is

$$\Sigma_D = \begin{pmatrix} D_1 & \rho\sigma^2 - \sqrt{(\sigma^2 - D_1)(\sigma^2 - D_2)} \\ \rho\sigma^2 - \sqrt{(\sigma^2 - D_1)(\sigma^2 - D_2)} & D_2 \end{pmatrix}.$$

The reconstruction satisfy the orthogonality condition, i.e., $E[(S_k - \hat{S}_k)\hat{S}_k] = 0$ for $k = 1, 2$. This leads to $\Sigma_S = \Sigma_{\hat{S}} + \Sigma_D$. Then the resulting reconstruction covariance matrix can be obtained:

(1) If $\rho^2 \geq \frac{\sigma^2-D_2}{\sigma^2-D_1}$, then the reconstruction matrix is $\Sigma_{\hat{S}} = \begin{pmatrix} \sigma^2 - D_1 & \rho\sigma^2 - \rho D_1 \\ \rho\sigma^2 - \rho D_1 & \rho^2(\sigma^2 - D_1) \end{pmatrix}$.

(2) If $\rho^2 \leq \frac{(\sigma^2-D_1)(\sigma^2-D_2)}{\sigma^4}$, then the reconstruction matrix is $\Sigma_{\hat{S}} = \begin{pmatrix} \sigma^2 - D_1 & 0 \\ 0 & \sigma^2 - D_2 \end{pmatrix}$.

(3) If $\frac{(\sigma^2-D_1)(\sigma^2-D_2)}{\sigma^4} \leq \rho^2 \leq \frac{\sigma^2-D_2}{\sigma^2-D_1}$, then the reconstruction matrix is

$$\Sigma_{\hat{S}} = \begin{pmatrix} \sigma^2 - D_1 & \sqrt{(\sigma^2-D_1)(\sigma^2-D_2)} \\ \sqrt{(\sigma^2-D_1)(\sigma^2-D_2)} & \sigma^2 - D_2 \end{pmatrix}.$$

For (2), the distortion covariance matrix implies that $S_1 \leftrightarrow \hat{S}_1 \leftrightarrow \hat{S}_2 \leftrightarrow S_2$ form a Markov chain because the distortion errors are independent. For (1) and (3), the determinant of $\Sigma_{\hat{S}}$ is 0, i.e., $E[\hat{S}_1^2]E[\hat{S}_2^2] = E[(\hat{S}_1\hat{S}_2)^2]$. According to Cauchy-Schwarz inequality, this suggests that $\hat{S}_1 = a\hat{S}_2$ for some constant $a$.

## 3.2 First Two Correlated and Independent of the Third One

Here, we study the problem of broadcasting three Gaussian source components to three receivers over an AWGN-BC. The covariance matrix of the correlated source components is as follows:

$$\Sigma_S = \begin{pmatrix} \sigma^2 & \rho\sigma^2 & 0 \\ \rho\sigma^2 & \sigma^2 & 0 \\ 0 & 0 & \sigma^2 \end{pmatrix}.$$

The three source components are jointly Gaussian and the first two components are correlated with each other while they are independent of the third one.

At receiver 1, apart from reconstructing $S_1$, $S_2$ is also reconstructed and we denote the reconstruction as $\hat{S}_{12}$. $D_2(D_1)$ is the minimum achievable distortion in estimating $S_2$ at receiver 1 when we achieve a distortion $D_1$ in estimating $S_1$. Reconstructing $(S_1, S_2)$ using $(\hat{S}_1, \hat{S}_{12})$ under individual distortion criteria corresponds to the problem in Section

3.1. Therefore, at receiver 1, we have either $S_1 \leftrightarrow \hat{S}_1 \leftrightarrow \hat{S}_{12} \leftrightarrow S_2$ form a Markov chain or $\hat{S}_1 = a\hat{S}_2$ for some constant $a$. We are going to show the distortion region for the two cases separately.

### 3.2.1 Inner Bound when $S_1 \leftrightarrow \hat{S}_1 \leftrightarrow \hat{S}_{12} \leftrightarrow S_2$

Here we will discuss the case when $S_1 \leftrightarrow \hat{S}_1 \leftrightarrow \hat{S}_{12} \leftrightarrow S_2$ form a Markov chain. Then we can write

$$\hat{S}_{12} = E[\hat{S}_{12}|S_1, S_2] + U_2 = a_1 S_1 + a_2 S_2 + U_2,$$

$$\hat{S}_1 = E[\hat{S}_1|S_1, S_2, \hat{S}_{12}] + U_1 = b_1 S_1 + b_2 \hat{S}_{12} + U_1,$$

where the coefficients are determined by the estimation and they will be used in the coding scheme.

Our coding scheme is shown in Figure 3.2. The distortion achieved in the coding scheme here corresponds to the boundary of the distortion region, which will be shown later. The channel input $X^n = X_a^n + X_d^n + X_{S_3}^n$ is sent over the channel, where the corresponding power for $X_a, X_d$ and $X_{S_3}$ are $P_a, P_d$ and $P_{S_3}$ satisfying $P_a + P_d + P_{S_3} = P$. In addition, we define $P_{S_1 S_2} = P_a + P_d$. For the reconstruction above, they satisfy that $R_{S_1,S_2}(D_1, D_2(D_1)) = I(S_1, S_2; \hat{S}_1, \hat{S}_{12}) = \frac{1}{2}\log\frac{P_{S_1S_2}+N_1}{N_1}$.The encoding details are as follows:

- Analog part $X_a^n$: $X_a^n = \alpha(a_1 S_1^n + a_2 S_2^n)$, where $\alpha = \sqrt{\frac{P_a}{Var(\sum_{i=1}^2 a_i S_i)}}$. In addition, $\alpha$ is chosen such that $I(S_1, S_2; \hat{S}_{12}) = I(S_1, S_2; Y_1')$, where $Y_1'^n = Y_1^n - X_{S_3}^n = X_a^n + X_d^n + Z_1^n$.

- $X_d^n$: $S_1^n$ is encoded using the Wyner-Ziv coding approach using $Y_1'^n$ as side information at receiver 1, where the auxiliary variable is chosen to be $b_1 S_1^n + U_1^n$. The

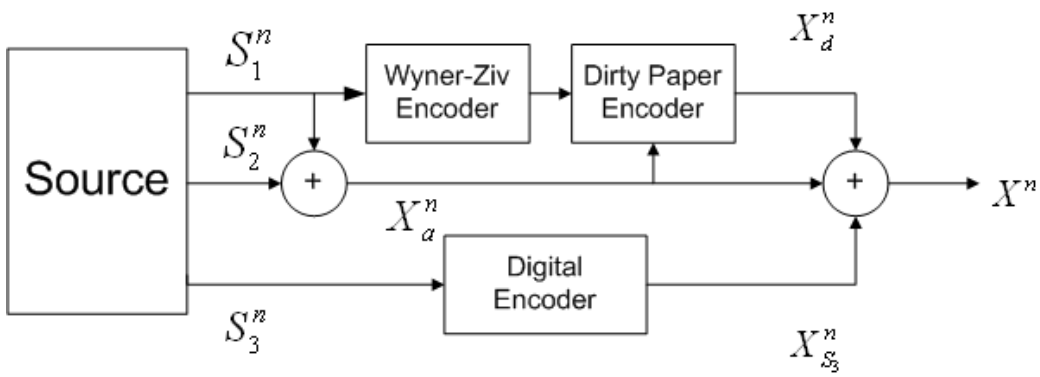


Figure 3.2: Broadcasting Three Gaussian Source Components over an AWGN-BC when first two are correlated: the Encoder Part

rate of the Wyner-Ziv encoder is $R_1 = I(S_1; b_1 S_1 + U_1 | Y_1')$. Then we use the dirty paper coding approach to encode the $2^{nR_1}$ Wyner-Ziv indices while treating $X_a^n$ as interference. We denote the auxiliary random variable as $T^n = X_d^n + \gamma X_a^n$, where $\gamma = \frac{P_d}{P_d + N_1}$. For each Wyner-Ziv index, find $T^n$ and then transmit $X_d^n = T^n - \gamma X_a^n$.

- $X_{S_3}^n$: the coding scheme for $S_3^n$ here is the same as the digital part for $S_2^n$ in [3]. Generate $2^{nI(S_3; X_{S_3})}$ codewords single-letter wise according the marginal distribution of $X_{S_3}$ and then we send the codeword. Besides, we require that $I(S_3; X_{S_3}) \leq I(X_{S_3}; Y_3)$, which ensures that all the receivers could successfully decode $X_{S_3}^n$. Note that both $S_3^n$ and $X_{S_3}^n$ are both independent of $S_1^n$ and $S_2^n$.

For the decoding part, at receiver 1, we first decode $X_{S_3}^n$ from $Y_1^n$, and we get $Y_1'^n$. Next, we will show that the Wyner-Ziv index can be decoded correctly at receiver 1. Note

that

$$\begin{aligned}
\frac{1}{2}\log\frac{P_a+P_d+N_1}{N_1} &= I(S_1,S_2;\hat{S}_1,\hat{S}_{12}) \\
&= I(S_1,S_2;b_1S_1+U_1,\hat{S}_{12}) \\
&= I(S_1,S_2;\hat{S}_{12}) + I(S_1,S_2;b_1S_1+U_1|\hat{S}_{12}) \\
&= I(S_1,S_2;Y_1') + I(S_1;b_1S_1+U_1|Y_1') \\
&= h(Y_1') - h(Y_1'|S_1,S_2) + I(S_1;b_1S_1+U_1|Y_1') \\
&= \frac{1}{2}\log\frac{P_a+P_d+N_1}{P_d+N_1} + I(S_1;b_1S_1+U_1|Y_1').
\end{aligned}$$

Then, we can see that $I(S_1;b_1S_1+U_1|Y_1') = \frac{1}{2}\log\frac{P_d+N_1}{N_1}$. This is equal to the dirty paper coding rate, i.e., $I(T;Y_1') - I(T;X_a) = \frac{1}{2}\log\frac{P_d+N_1}{N_1}$. It is guaranteed that $b_1S_1+U_1$ can be successfully decoded at receiver 1.

According to the decoding scheme shown in Figure 3.3, at receiver 1, we have

$$\begin{aligned}
\frac{1}{2}\log\frac{(1-\rho^2)\sigma^2}{D_{1|2}} &= I(S_1;b_1S_1+U_1,Y_1'|S_2) \\
&= I(S_1;Y_1'|S_2) + I(S_1;b_1S_1+U_1|S_2,Y_1') \\
&= I(S_1;Y_1'|S_2) + I(S_1;b_1S_1+U_1|Y_1') \\
&= h(Y_1'|S_2) - h(Y_1'|S_1,S_2) + \frac{1}{2}\log\frac{P_d+N_1}{N_1} \\
&= \frac{1}{2}\log\frac{\alpha^2a_1^2(1-\rho^2)\sigma^2+P_d+N_2}{P_d+N_1} + \frac{1}{2}\log\frac{P_d+N_1}{N_1} \\
&= \frac{1}{2}\log\frac{\alpha^2a_1^2(1-\rho^2)\sigma^2+P_d+N_2}{N_1}. \qquad (3.1)
\end{aligned}$$

where $D_{1|2}$ refers to the distortion when $S_2$ is presented at receiver 1. Since $S_1 \leftrightarrow \hat{S}_1 \leftrightarrow \hat{S}_{12} \leftrightarrow S_2$ form a Markov chain, $S_1 \leftrightarrow (Y_1', b_1S_1+U_1) \leftrightarrow S_2$ also form a Markov chain.

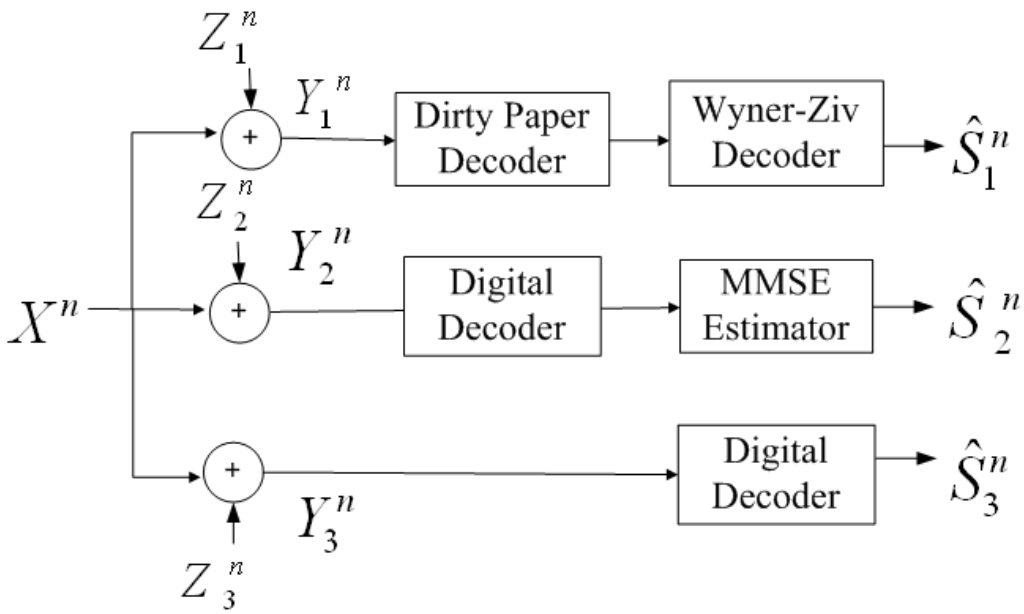


Figure 3.3: Broadcasting Three Gaussian Source Components over an AWGN-BC when first two are correlated: the Decoder Part

It follows that $D_{1|2}$ is equal to the distortion $D_1$ when $S_2$ is not presented. Therefore, the achievable distortion $D_1$ is determined.

At receiver 2, we have

$$\begin{aligned}
\frac{1}{2}\log\frac{\sigma^2}{D_2} &= I(S_2;\hat{S}_2) \\
&= I(S_2;Y_2') \\
&= h(Y_2') - h(Y_2'|S_2^n) \\
&= \frac{1}{2}\log(2\pi e(P_a+P_d+N_2)) - \frac{1}{2}\log(2\pi e(\alpha^2 a_1^2(1-\rho^2)\sigma^2+P_d+N_2)) \\
&= \frac{1}{2}\log\frac{P_a+P_d+N_2}{\alpha^2 a_1^2(1-\rho^2)\sigma^2+P_d+N_2}. \qquad (3.2)
\end{aligned}$$

Hence, we have also determined the achievable distortion $D_2$.

At receiver 3, we have

$$\begin{aligned}\frac{1}{2}\log\frac{\sigma^2}{D_3} &= I(S_3;\hat{S}_3)\\ &= I(X_{S_3};Y_3)\\ &= h(Y_3)-h(Y_3|X_{S_3})\\ &= \frac{1}{2}\log\frac{P+N_3}{P_a+P_d+N_3}.\end{aligned} \tag{3.3}$$

To sum up, (3.1), (3.2) and (3.3) give an inner bound of the achievable distortion region.

### 3.2.2 Inner Bound when $\hat{S}_1 = a\hat{S}_{12}$

Here we set $P_d = 0$ in the above coding scheme and everything else is the same, where $P_a + P_{S_3} = P$. Then $X^n = X_a^n + X_{S_3}^n$ is transmitted over the three-user AWGN-BC.

At the first and the second receivers, we first try to find a unique $X_{S_3}^n$ in the codebook that is jointly typical with $Y_1^n$ and $Y_2^n$, and then remove the digital part $X_{S_3}^n$ and do MMSE estimation based on the analog part. For example, for $S_1^n$, $X_{S_3}^n$ is decoded and subtracted from $Y_1^n$, then MMSE estimation is used to reconstruct $S_1^n$ based on $\alpha(a_1S_1^n + a_2S_2^n) + Z_1^n$. Note that $S_1^n$ is independent of $S_3^n$ and we will not have any loss without considering $X_{S_3}^n$. Then we have $\frac{1}{2}\log\frac{\sigma^2}{D_1} = I(S_1;\hat{S}_1) = I(S_1;Y_1')$, where $Y_1' = Y_1 - X_{S_3}$, which leads to

$$\frac{1}{2}\log\frac{\sigma^2}{D_1} = \frac{1}{2}\log\frac{P_a+N_1}{\alpha^2a_2^2(1-\rho^2)\sigma^2+N_1}. \tag{3.4}$$

Therefore, we have specified the achievable distortion $D_1$.

For $S_2^n$, at receiver 2, we have

$$\frac{1}{2}\log\frac{\sigma^2}{D_2} = I(S_1;\hat{S}_2) = I(S_2;Y_2'),$$

where $Y_2'^n = Y_2^n - X_{S_3}^n$. Now we have

$$\frac{1}{2}\log\frac{\sigma^2}{D_2} = \frac{1}{2}\log\frac{P_a + N_2}{\alpha^2 a_1^2(1-\rho^2)\sigma^2 + N_2}. \tag{3.5}$$

Therefore, we have specified the achievable distortion $D_2$.

For $S_3^n$, receiver 3 decodes $X_{S_3}^n$ and calculates the distortion according to $S_3^n$ and $X_{S_3}^n$. Note that $S_3$ is independent of $S_1$ and $S_2$ and we will not have any loss without considering $\alpha(a_1S_1^n + a_2S_2^n) + Z_3^n$. Therefore, we could get

$$\begin{aligned}
\frac{1}{2}\log\frac{\sigma^2}{D_3} &= I(S_3;X_{S_3}) \\
&= I(S_3;Y_3) \\
&= h(Y_3) - h(Y_3|S_3) \\
&= \frac{1}{2}\log(2\pi e(P+N_3)) - h(Y_3|S_3) \\
&= \frac{1}{2}\log(2\pi e(P+N_3)) - h(Y_3 - X_{S_3}|S_3) \\
&= \frac{1}{2}\log(2\pi e(P+N_3)) - h(\alpha(a_1S_1 + a_2S_2) + N_3|S_3) \\
&= \frac{1}{2}\log(2\pi e(P+N_3)) - h(\alpha(a_1S_1 + a_2S_2) + N_3) \\
&= \frac{1}{2}\log(2\pi e(P+N_3)) - \frac{1}{2}\log(2\pi e(P_a+N_3)) \\
&= \frac{1}{2}\log\frac{P+N_3}{P_a+N_3}.
\end{aligned} \tag{3.6}$$

Therefore, we have specified the achievable distortion $D_3$.

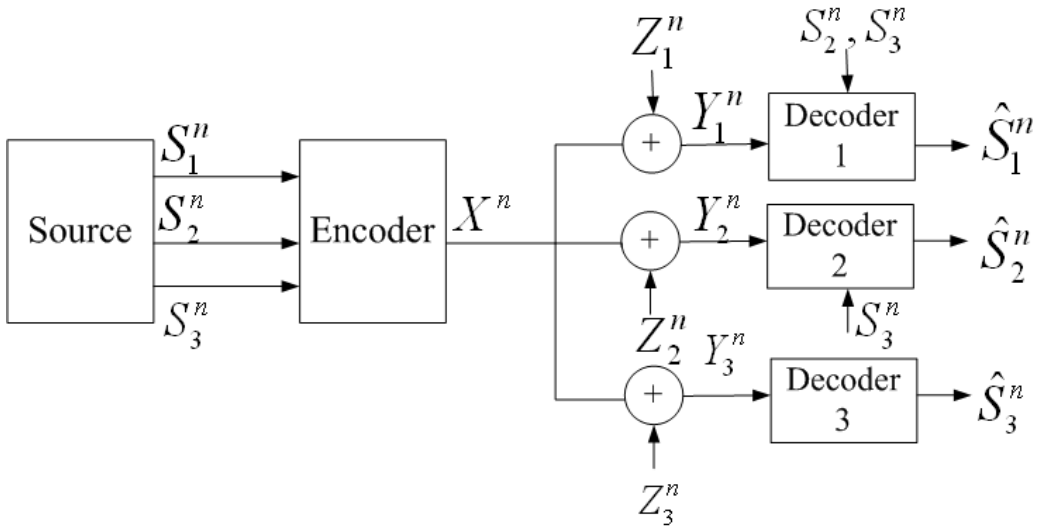


Figure 3.4: Broadcasting Three Gaussian Source Components over AWGN-BC with Genie-aided Receivers

To sum up, (3.4), (3.5) and (3.6) give an inner bound of the achievable distortion region.

### 3.2.3 Outer Bound

To prove the outer bound here, we will use a genie-aided argument. The setup is shown in Figure 3.4.

**Lemma 3.1**: The distortion region of broadcasting correlated Gaussian source components is bounded by:

$$\frac{n}{2}\log\frac{\sigma^2(1-\rho^2)}{D_{1|2,3}} \leq \frac{n}{2}\log(\frac{\alpha_1 P + N_1}{N_1}),$$

$$\frac{n}{2}\log\frac{\sigma^2}{D_{2|3}} \leq \frac{n}{2}\log(\frac{(\alpha_1+\alpha_2)P + N_2}{\alpha_1 P + N_2}),$$

$$\frac{n}{2}\log(\frac{\sigma^2}{D_3}) \leq \frac{n}{2}\log(\frac{P + N_3}{(\alpha_1+\alpha_2)P + N_3}).$$

**Proof**: The proof is similar to that in Section 2.3.2:

For $S_1^n$, we have

$$\frac{n}{2}\log\frac{\sigma_{\Delta_1}^2}{D_{1|2,3}} \leq I(S_1^n;\hat{S}_1^n|S_2^n,S_3^n), \tag{3.7}$$

where $\Delta_1 = S_1 - E[S_1|S_2,S_3]$; $D_{1|2,3}$ denotes the distortion of reconstructing $S_1^n$ when $S_2^n, S_3^n$ are given at receiver 1. Besides, we have

$$I(S_1^n;\hat{S}_1^n|S_2^n,S_3^n) \leq I(S_1^n;Y_1^n|S_2^n,S_3^n),$$

which follows from the DPI.

Note that

$$\begin{aligned} I(S_1^n;Y_1^n|S_2^n,S_3^n) &= h(Y_1^n|S_2^n,S_3^n) - h(Y_1^n|S_1^n,S_2^n,S_3^n) \\ &= h(Y_1^n|S_2^n,S_3^n) - h(Z_1^n) \\ &= h(Y_1^n|S_2^n,S_3^n) - \frac{n}{2}\log(2\pi e N_1) \end{aligned} \tag{3.8}$$

Besides,

$$\frac{n}{2}\log(2\pi e N_1) = h(Z_1^n) \leq h(Y_1^n|S_2^n,S_3^n) \leq h(Y_1^n) \leq \frac{n}{2}\log 2\pi e(P+N_1),$$

which follows from the property of entropy and conditional entropy. Hence, there exists $\alpha_1 \in [0,1]$, s.t. $h(Y_1^n|S_2^n,S_3^n) = \frac{n}{2}\log(2\pi e(\alpha_1 P + N_1))$. Therefore, we have the RHS of

(3.8):

$$RHS = \frac{n}{2}\log(\frac{\alpha_1 P + N_1}{N_1}). \tag{3.9}$$

Since $\sigma^2_{\Delta_1} = \sigma^2(1-\rho^2)$, combining (3.7) and (3.9) yields that

$$\frac{n}{2}\log\frac{\sigma^2(1-\rho^2)}{D_{1|2,3}} \leq \frac{n}{2}\log(\frac{\alpha_1 P + N_1}{N_1}). \tag{3.10}$$

Therefore, (3.10) gives a lower bound for $D_{1|2,3}$.

For $S_2^n$, following the same technique in Section 2.3.2, we could get

$$\frac{n}{2}\log\frac{\sigma^2}{D_{2|3}} \leq \frac{n}{2}\log(\frac{(\alpha_1+\alpha_2)P + N_2}{\alpha_1 P + N_2}), \tag{3.11}$$

Therefore, (3.11) gives a lower bound for $D_{2|3}$.

Similarly, for $S_3^n$, we have

$$\frac{n}{2}\log(\frac{\sigma^2}{D_3}) \leq \frac{n}{2}\log(\frac{P + N_3}{(\alpha_1+\alpha_2)P + N_3}). \tag{3.12}$$

To sum up, (3.10), (3.11) and (3.12) give a genie-aided outer bound of the achievable distortion region. It will be shown later that the outer bound here is tight for the case when $S_1 \leftrightarrow \hat{S}_1 \leftrightarrow \hat{S}_{12} \leftrightarrow S_2$ form a Markov chain.

In the following part, we will provide a lower bound of $D_2$ in terms of a fixed $D_1$ when receiver 1 has $S_2^n$ as side information. Let $D_{1|2}$ be the least distortion in estimating $S_1^n$ at receiver 1 when $S_2^n$ is provided as side information. First, we will derive an upper bound

on $D_{1|2}$ by considering the linear estimate of $S_1$ based on $\hat{S}_1$ and $S_2$. Thus we have

$$\begin{aligned} D_{1|2} &\leq \frac{1}{n}\sum_{i=1}^{n} E[(S_1(i) - \mu_1\hat{S}_1(i) - \mu_2 S_2(i))^2] \\ &= \sigma^2 + \mu_1^2 E[\hat{S}_1^2] + \mu_2^2 E[\hat{S}_2^2] - 2\mu_1 E[S_1\hat{S}_1] - 2\mu_1 E[S_1 S_2] + 2\mu_1\mu_2 E[\hat{S}_1 S_2] \\ &= \sigma^2 + \mu_1^2(\sigma^2 - D_1) + \mu_2^2\sigma^2 - 2\mu_1(\sigma^2 - D_1) - 2\mu_2\rho\sigma^2 + 2\mu_1\mu_2 E[\hat{S}_1 S_2]. \quad (3.13) \end{aligned}$$

Let $\mu_3\hat{S}_1^n$ be a linear estimate of $S_2^n$ using $\hat{S}_1^n$. Then

$$\frac{1}{n}\sum_{i=1}^{n} E(S_2(i) - \mu_3\hat{S}_1(i))^2 \geq D_2(D_1),$$

for any $\mu_3$, where $D_2(D_1)$ refers to the smallest distortion in estimating $S_2$ when achieving $D_1$. By choosing $\mu_3 = \sqrt{\frac{\sigma^2 - D_2(D_1)}{\sigma^2 - D_1}}$, expanding the above equation and plugging in $\frac{1}{n}\sum_{i=1}^{n} E(\hat{S}_1(i))^2 = \sigma^2 - D_1$, we get

$$E[\hat{S}_1 S_2] \leq \sqrt{E[\hat{S}_1^2]E[(\mu_3\hat{S}_1)^2]} \leq \sqrt{(\sigma^2 - D_1)(\sigma^2 - D_2(D_1))}. \quad (3.14)$$

It leads to an upper bound on $D_{1|2}$:

$$D_{1|2} \leq \sigma^2 + (\mu_1^2 - 2\mu_1)(\sigma^2 - D_1) + \mu_2^2\sigma^2 - 2\mu_2\rho\sigma^2 + 2\mu_1\mu_2\sqrt{(\sigma^2 - D_1)(\sigma^2 - D_2(D_1))}. \quad (3.15)$$

Moreover, by combining the genie-aided outer bound derived for $D_{1|2}$(i.e.,$D_{1|2,3}$, due to the independence of $S_1$ and $S_3$) and $D_2$(i.e., $D_{2|3}$, due to the independence of $S_2$ and $S_3$),

we could get a lower bound on $D_{2|3}$ in terms of $D_{1|2,3}$, i.e.,

$$D_2 \geq \frac{\sigma^2}{(\alpha_1+\alpha_2)P+N_2}\left(\frac{\sigma^2(1-\rho^2)N_1}{D_{1|2}}+N_2-N_1\right). \tag{3.16}$$

Combining (3.15) and (3.16) together, we could get a lower bound for $D_2$ in terms of any achievable $D_1$, which determines the tradeoff between $D_1$ and $D_2$. To sum up, we have shown a lower bound of $D_2$ in terms of a fixed $D_1$. This bound is tight for the case when $\hat{S}_1 = a\hat{S}_{12}$ where $R_{S_1,S_2}(D_1, D_2(D_1)) = I(S_1, S_2; \hat{S}_1, \hat{S}_{12}) = \frac{1}{2}\log\frac{P_{S_1S_2}+N_1}{N_1}$.

### 3.2.4 Achievable Distortion Region when $S_1 \leftrightarrow \hat{S}_1 \leftrightarrow \hat{S}_{12} \leftrightarrow S_2$

If we let $\alpha^2 a_1^2(1-\rho^2)\sigma^2 + P_d = \alpha_1 P$ and $P_a + P_d = (\alpha_1+\alpha_2)P$ in the inner bound and because the construction of the coding scheme, we can see that the inner bound meets the genie-aided outer bound. As a result, the distortion region is determined.

### 3.2.5 Achievable Distortion Region when $\hat{S}_1 = a\hat{S}_{12}$

First of all, for $S_3^n$, we can easily see that the inner bound meets the genie-aided outer bound for $D_3$. Besides, the distortion tradeoff between $D_1$, $D_2$ and $D_3$ depends on the power allocation, i.e., the choice of $P_a$ and $P_{S_3}$. In addition, the distortion tradeoff between $D_1$ and $D_2$ is given in the outer bound part. Since $S_1$, $\hat{S}_1$, and $S_2$ are jointly Gaussian, we can see that the inner bound meets the outer bound.

### 3.2.6 Summary

So far, we have established inner and outer bounds for two regions, one for the case where $S_1 \leftrightarrow \hat{S}_1 \leftrightarrow \hat{S}_{12} \leftrightarrow S_2$ form a Markov chain and the other for case where $\hat{S}_1 = a\hat{S}_{12}$. In

addition, for both scenarios, we have shown that the inner bound meets the outer bound.

## 3.3 Last Two Correlated and Independent of the First One

Here, we study the problem of broadcasting three Gaussian source components to three receivers over an AWGN-BC. The covariance matrix of the correlated sources is as follows:

$$\Sigma_S = \begin{pmatrix} \sigma^2 & 0 & 0 \\ 0 & \sigma^2 & \rho\sigma^2 \\ 0 & \rho\sigma^2 & \sigma^2 \end{pmatrix}.$$

The three source components are jointly Gaussian and the last two components are correlated with each other and they are independent of the first one.

Note that at receiver 2, apart from reconstructing $S_2$, we can also reconstruct $S_3$ and we denote the reconstruction as $\hat{S}_{23}$. We define $D_3(D_2)$ as the minimum achievable distortion in estimating $S_3$ at receiver 2 when we achieve a distortion $D_2$ in estimating $S_2$. We can see that this problem corresponds to that in Section 3.1. Therefore, at receiver 2, we have either $S_2 \leftrightarrow \hat{S}_2 \leftrightarrow \hat{S}_{23} \leftrightarrow S_3$ form a Markov chain or $\hat{S}_2 = a\hat{S}_{23}$ for some constant $a$. We shall establish the distortion regions for the two cases separately.

### 3.3.1 Inner Bound when $S_2 \leftrightarrow \hat{S}_2 \leftrightarrow \hat{S}_{23} \leftrightarrow S_3$

At receiver 2, we have $S_2 \leftrightarrow \hat{S}_2 \leftrightarrow \hat{S}_{23} \leftrightarrow S_3$ form a Markov chain and we can write

$$\hat{S}_2 = E[\hat{S}_2|S_2, S_3, \hat{S}_{23}] = b_2 S_2 + b_3 \hat{S}_{23} + U_2,$$

$$\hat{S}_{23} = E[\hat{S}_{23}|S_2, S_3] + U_2 = a_1 S_2 + a_2 S_3 + U_3,$$

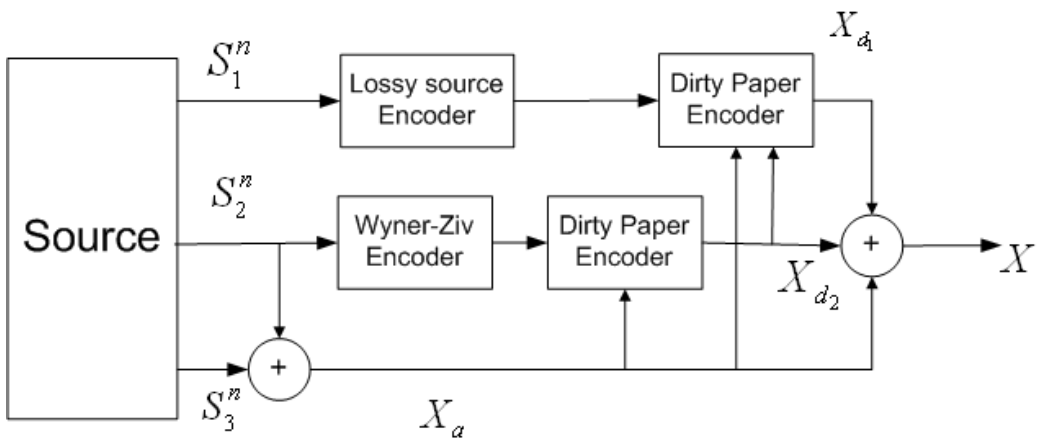


Figure 3.5: Broadcasting Three Gaussian Source Components over an AWGN-BC when last two are correlated: the Encoder Part

where the coefficients are determined by the estimation and they will be used in the coding scheme.

Our coding scheme is shown in Figure 3.5. The channel input is $X^n = X_a^n + X_{d_1}^n + X_{d_2}^n$, and the corresponding power for $X_a, X_{d_1}$ and $X_{d_2}$ are $P_a, P_{d_1}$ and $P_{d_2}$, where $P_a + P_{d_1} + P_{d_2} = P$. In addition, we define $P_{S_2S_3} = P_a + P_{d_2}$.

For our coding scheme, $X_a^n$ denotes the analog part and $X_a^n = \alpha(a_2S_2^n + a_3S_3^n)$, where $\alpha = \sqrt{\frac{P_a}{Var(\sum_{i=2}^{3} a_iS_i)}}$. We shall find $\alpha$ such that $I(S_2, S_3; \hat{S}_3) = I(S_2, S_3; Y_2)$. Second, we encode $S_2^n$ using the Wyner-Ziv coding approach into $b_2S_2^n + U_2^n$ at the rate of $R_2 = I(S_2; b_2S_2 + U_2|Y_2)$ with $Y_2$ as side information. Then we use the dirty paper coding approach to encode the $2^{nR_2}$ Wyner-Ziv indices while treating $X_a^n$ as interference. We denote the auxiliary random variable as $T_2^n = X_{d_2}^n + \gamma_2 X_a^n$, where $\gamma_2 = \frac{P_{d_2}}{P_{d_1}+P_{d_2}+N_2}$ and then we transmit $X_{d_2}^n = T_2^n - \gamma_2 X_a^n$. Third, for $S_1^n$, we first quantize $S_1^n$ into $X_{S_1}^n$ using lossy source coding at the rate of $R_1 = \frac{1}{2}\log\frac{P_{d_1}+N_1}{N_1}$. And then we use the dirty paper coding approach to encode the $2^{nR_1}$ lossy source coding index while treating $X_a^n$ and $X_{d_2}^n$ as channel state. We denote the auxiliary random variable as $T_1^n = X_{d_1}^n + \gamma_1(X_a^n + X_{d_2}^n)$,

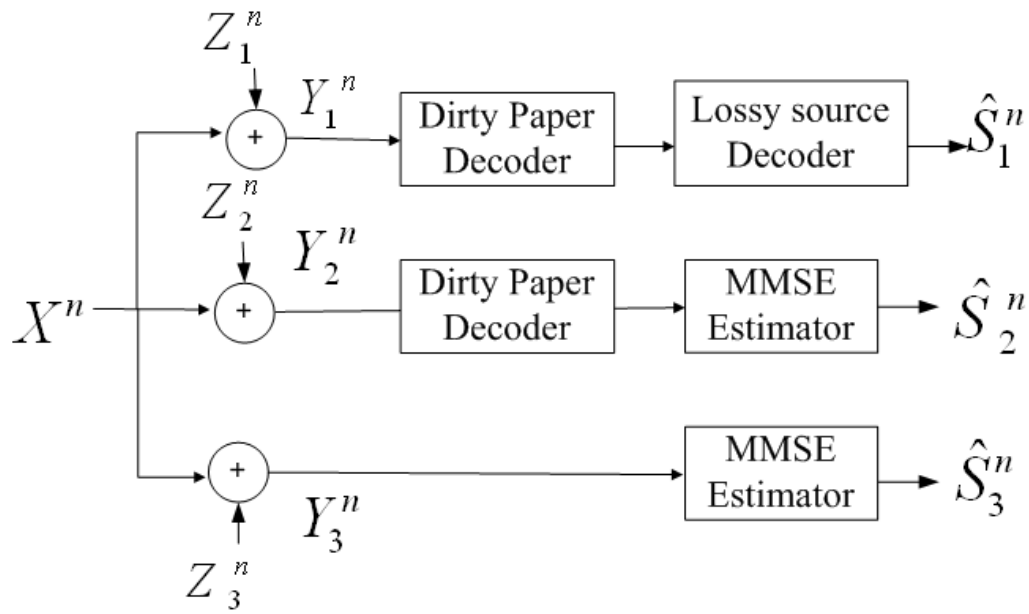


Figure 3.6: Broadcasting Three Gaussian Source Components over an AWGN-BC when last two are correlated: the Decoder Part

where $\gamma_1 = \frac{P_{d_1}}{P_{d_1}+N_1}$ and then we transmit $X_{d_1}^n = T_1^n - \gamma_1(X_a^n + X_{d_2}^n)$.

The decoding procedure is shown in Figure 3.6. At receiver 3, we do MMSE estimation to reconstruct $S_3$ and we have

$$\begin{aligned}\frac{1}{2}\log\frac{\sigma^2}{D_3} &= I(S_3;\hat{S}_3)\\ &= I(S_3;Y_3)\\ &= h(Y_3) - h(Y_3|S_3)\\ &= \frac{1}{2}\log\frac{P+N_3}{\alpha^2 a_2^2(1-\rho^2)\sigma^2 + P_{d_1} + P_{d_2} + N_3}.\end{aligned} \tag{3.17}$$

Therefore, we have specified the achievable distortion $D_3$.

Next, we will show that the Wyner-Ziv index for $S_2$ can be successfully decoded. We

have

$$\begin{aligned}
\frac{1}{2}\log\frac{P+N_2}{P_{d_1}+N_2} &= I(S_2,S_3;\hat{S}_2,\hat{S}_{23}) \\
&= I(S_2,S_3;b_2S_2+U_2,\hat{S}_{23}) \\
&= I(S_2,S_3;\hat{S}_{23}) + I(S_2,S_3;b_2S_2+U_2|\hat{S}_{23}) \\
&= I(S_2,S_3;Y_2) + I(S_2;b_2S_2+U_2|Y_2) \\
&= h(Y_2) - h(Y_2|S_2,S_3) + I(S_2;b_2S_2+U_2|Y_2) \\
&= \frac{1}{2}\log\frac{P+N_2}{P_{d_1}+P_{d_2}+N_2} + I(S_2;b_2S_2+U_2|Y_2).
\end{aligned}$$

Therefore, we have $I(S_2;b_2S_2+U_2|Y_2) = \frac{1}{2}\log\frac{P_{d_1}+P_{d_2}+N_2}{P_{d_1}+N_2}$, and the Wyner-Ziv coding rate is equal to the DPC rate. So we can correctly decode the Wyner-Ziv index and we can reconstruct $S_2$ using $Y_2$ and $b_2S_2+U_2$. Note that

$$\begin{aligned}
\frac{1}{2}\log\frac{(1-\rho^2)\sigma^2}{D_{2|3}} &= I(S_2;b_2S_2+U_2,Y_2|S_3) \\
&= I(S_2;Y_2|S_3) + I(S_2;b_2S_2+U_2|Y_2) \\
&= h(Y_2|S_3) - h(Y_2|S_2,S_3) + \frac{1}{2}\log\frac{P_{d_1}+P_{d_2}+N_2}{P_{d_1}+N_2} \\
&= \frac{1}{2}\log\frac{\alpha^2a_2^2(1-\rho^2)\sigma^2+P_{d_1}+P_{d_2}+N_2}{P_{d_1}+P_{d_2}+N_2} + \frac{1}{2}\log\frac{P_{d_1}+P_{d_2}+N_2}{P_{d_1}+N_2} \\
&= \frac{1}{2}\log\frac{\alpha^2a_2^2(1-\rho^2)\sigma^2+P_{d_1}+P_{d_2}+N_2}{P_{d_1}+N_2}. \qquad (3.18)
\end{aligned}$$

Since we have $S_2 \leftrightarrow (Y_2, b_2S_2+U_2) \leftrightarrow S_3$ form a Markov chain, which results in $D_{2|3} = D_2$.

At receiver 1, the DPC rate is $I(T_1;Y_1) - I(T_1;X_a,X_{d_2}) = \frac{1}{2}\log\frac{P_{d_1}+N_1}{N_1}$. The lossy source coding rate is equal to the DPC rate, therefore we can successfully decode the lossy

source code and we have

$$\begin{aligned}\frac{1}{2}\log\frac{\sigma^2}{D_1} &= I(S_1; X_{S_1}) \\ &= \frac{1}{2}\log\frac{P_{d_1}+N_1}{N_1}.\end{aligned} \tag{3.19}$$

To sum up, (3.19), (3.18) and (3.17) give an inner bound of the achievable distortion region.

### 3.3.2 Inner bound when $\hat{S}_2 = a\hat{S}_{23}$

For the inner bound, we set $P_{d_2} = 0$ in the coding scheme and everything else is the same as the one in section 3.3.1. The power of the analog part is $P_a$ ($P_a + P_{d_1} = P$). We transmit $X^n = X_a^n + X_{d_1}^n$ over the three-user AWGN-BC.

At the second and third receivers, we do MMSE estimation to reconstruct $S_2$ and $S_3$. For $D_2$, we have

$$\frac{1}{2}\log\frac{\sigma^2}{D_2} = \frac{1}{2}\log\frac{P+N_2}{\alpha^2 a_3^2(1-\rho^2)\sigma^2+N_2}. \tag{3.20}$$

For $D_3$, we have

$$\frac{1}{2}\log\frac{\sigma^2}{D_3} = \frac{1}{2}\log\frac{P+N_3}{\alpha^2 a_2^2(1-\rho^2)\sigma^2+N_3}. \tag{3.21}$$

For $S_1^n$, at receiver 1, we first do dirty paper decoding and then lossy source decoding to get $\hat{S}_1$. We have

$$\frac{1}{2}\log\frac{\sigma^2}{D_1} = \frac{1}{2}\log\frac{P_{d_1}+N_1}{N_1}. \tag{3.22}$$

In sum, (3.22), (3.20) and (3.21) give an inner bound of the achievable distortion region.

### 3.3.3 Outer Bound

Here, we will first derive an outer bound via a genie-aided argument.

**Lemma 3.2**: The distortion region of broadcasting correlated Gaussian source components is bounded by:

$$\frac{n}{2}\log\frac{\sigma^2}{D_{1|2,3}} \leq \frac{n}{2}\log\frac{\alpha_1 P + N_1}{N_1},$$

$$\frac{n}{2}\log\frac{\sigma^2(1-\rho^2)}{D_{2|3}} \leq \frac{n}{2}\log\frac{(\alpha_1+\alpha_2)P + N_2}{\alpha_1 P + N_2},$$

$$\frac{n}{2}\log\frac{\sigma^2}{D_3} \leq \frac{n}{2}\log\frac{P + N_3}{(\alpha_1+\alpha_2)P + N_3}.$$

Note that the proof is quite similar to that for the genie-aided outer bound in the earlier sections such as Section 3.2.2 and it is omitted here.

In the following part, we will provide a lower bound of $D_3$ in terms of a fixed $D_2$ while using $D_{2|3}$ as an intermediate variable, where $D_{2|3}$ denotes the least distortion in estimating $S_2^n$ at receiver 2 when $S_3^n$ is provided as side information. The proof here is similar to that in Section 3.2.3.

First, we derive an upper bound on $D_{2|3}$ by considering the linear MMSE estimate of $S_2$ based on $\hat{S}_2$ and $S_3$ (i.e., $\mu_1\hat{S}_2 + \mu_2 S_3$). Thus we have

$$\begin{aligned} D_{2|3} &\leq \frac{1}{n}\sum_{i=1}^{n} E[(S_2(i) - \mu_1\hat{S}_2(i) - \mu_2 S_3(i))^2] \\ &= \sigma^2 + \mu_1^2 E[\hat{S}_2^2] + \mu_2^2 E[\hat{S}_3^2] - 2\mu_1 E[S_2\hat{S}_2] - 2\mu_1 E[S_2 S_3] + 2\mu_1\mu_2 E[\hat{S}_2 S_3] \\ &= \sigma^2 + \mu_1^2(\sigma^2 - D_1) + \mu_2^2\sigma^2 - 2\mu_1(\sigma^2 - D_1) - 2\mu_2\rho\sigma^2 + 2\mu_1\mu_2 E[\hat{S}_2 S_3]. \quad (3.23) \end{aligned}$$

Let $\mu_3\hat{S}_2^n$ be an linear estimate of $S_3^n$ based on $\hat{S}_2^n$. Then

$$\frac{1}{n}\sum_{i=1}^{n} E(S_3(i) - \mu_3\hat{S}_2(i))^2 \geq D_3(D_2),$$

for any $\mu_3$. By choosing $\mu_3 = \sqrt{\frac{\sigma^2 - D_3(D_2)}{\sigma^2 - D_2}}$, expanding the above equation and plugging in $\frac{1}{n}\sum_{i=1}^{n} E(\hat{S}_2(i))^2 = \sigma^2 - D_2$, we get

$$E[\hat{S}_2 S_3] \leq \sqrt{(\sigma^2 - D_2)(\sigma^2 - D_3(D_2))}.$$

Plug in (3.23) we have an upper bound on $D_{2|3}$:

$$D_{2|3} \leq \sigma^2 + (\mu_1^2 - 2\mu_1)(\sigma^2 - D_2) + \mu_2^2\sigma^2 - 2\mu_2\rho\sigma^2 + 2\mu_1\mu_2\sqrt{(\sigma^2 - D_2)(\sigma^2 - D_3(D_2))}. \tag{3.24}$$

Moreover, by combining the genie-aided outer bound derived for $D_{2|3}$ and $D_3$, we could get a lower bound on $D_3$ in terms of $D_{2|3}$, i.e.,

$$D_3 \geq \frac{\sigma^2}{(1-\alpha_1)P + N_3}\left(\frac{\sigma^2(1-\rho^2)N_2}{D_{2|3}} + N_3 - N_2\right). \tag{3.25}$$

By combining (3.24) and (3.25) together, we could get a lower bound for $D_3$ for any achievable $D_2$ when $\hat{S}_2 = a\hat{S}_{23}$, which specifies the tradeoff between $D_2$ and $D_3$. So far, we have given a lower bound for $D_1$ and $D_3$ in terms of fixed $D_2$.

### 3.3.4 Achievable Distortion Region when $S_2 \leftrightarrow \hat{S}_2 \leftrightarrow \hat{S}_{23} \leftrightarrow S_3$

If we let $P_{d_1} = \alpha_1 P$ and $\alpha^2 a_2^2(1-\rho^2)\sigma^2 + P_{d_1} + P_{d_2} = (\alpha_1 + \alpha_2)P$ in the inner bound and because of our construction in the inner bound, we can see that the inner bound meets the

genie-aided outer bound. So the distortion region is determined.

### 3.3.5 Achievable Distortion Region when $\hat{S}_2 = a\hat{S}_{23}$

First of all, for $S_1^n$, we can easily see that the inner bound can meet the outer bound if we set $P_{d_1} = \alpha_1 P$. Besides, the distortion tradeoff between $D_1$, $D_2$ and $D_3$ depends on the power allocation, i.e., the value choice of $P_a$ and $P_{d_1}$. Second, we have shown the distortion tradeoff between $D_2$ and $D_3$ in the outer bound part. Since $S_2$, $\hat{S}_2$, and $S_3$ are jointly Gaussian, we can see the inner bound meets the outer bound for $S_2$ and $S_3$.

To sum up, we have shown that the analog scheme achieves the distortion region when $\hat{S}_2 = a\hat{S}_{23}$.

### 3.3.6 Summary

So far, we have established inner and outer bounds for two regions, one when $S_2 \leftrightarrow \hat{S}_2 \leftrightarrow \hat{S}_{23} \leftrightarrow S_3$ form a Markov chain and another when $\hat{S}_2 = a\hat{S}_{23}$. In addition, for both scenarios, we have shown that the inner bound meets the outer bound and determine the achievable distortion region.

# Chapter 4

# Two Correlated Source Components and One Independent Component with Side Information at Receiver

In this chapter, we will study two special problem setups of broadcasting three Gaussian source components over an AWGN-BC with side information at receiver. In both cases,there are two correlated source components and they are independent of the remaining one.

## 4.1 Third Component with Side Information at Receiver

Here, we study the problem of broadcasting three Gaussian source components to three receivers over an AWGN-BC with side information at the receiver which wishes to reconstruct the independent source component. The setup is illustrated in Figure 4.1.

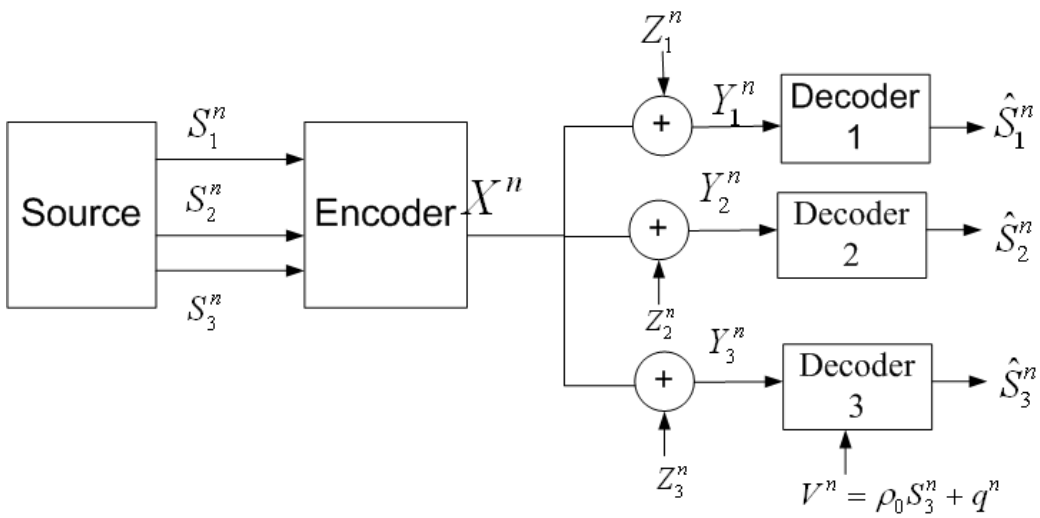


Figure 4.1: Broadcasting Three Gaussian Source Components over AWGN-BC with Side Information at Receiver when first two are correlated

The covariance matrix of the correlated sources is as follows:

$$\Sigma_S = \begin{pmatrix} \sigma^2 & \rho\sigma^2 & 0 \\ \rho\sigma^2 & \sigma^2 & 0 \\ 0 & 0 & \sigma^2 \end{pmatrix}.$$

The three source components are jointly Gaussian and the first two components are correlated with each other and they are independent of the third one.

Since we have side information $V^n = \rho_0 S_3^n + q^n$ at receiver 3, where $q \sim N(0, Q)$ is a Gaussian random variable and is independent of everything else. It follows that even if we do not transmit anything about $S_3^n$ in $X^n$, we still could reconstruct $S_3^n$ using $V^n$. The distortion for reconstructing $S_3$ based on $V^n$ is $D_{3max} = \frac{\sigma^2 Q}{\rho_0^2\sigma^2+Q}$. Therefore, for any $D_3 > D_{3max}$, we just do not transmit anything about $S_3^n$ in $X^n$. Moreover, the problem reduces to transmitting only $S_1$ and $S_2$, which is solved in [2] and [3]. So in the following section, we only consider the case when $D_3 \leq D_{3max} = \frac{\sigma^2 Q}{\rho_0^2\sigma^2+Q}$.

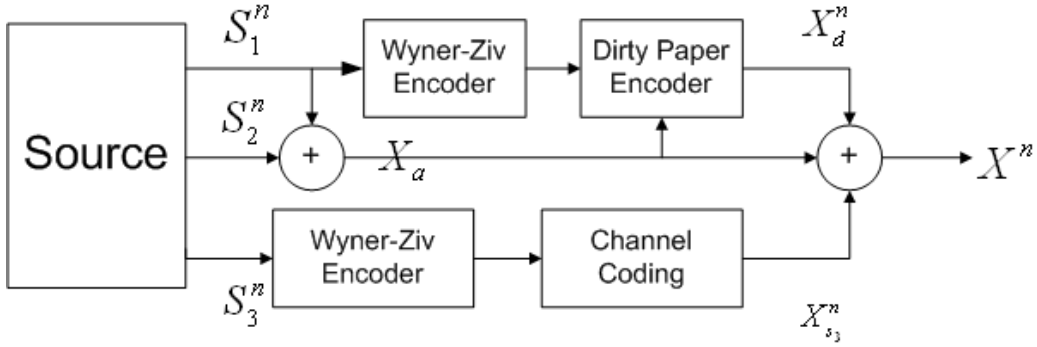


Figure 4.2: Broadcasting Three Gaussian Source Components over AWGN-BC with Side Information at Receiver: the Encoder Part

Note that as in earlier sections, at receiver 1, apart from reconstructing $S_1$, we also reconstruct $S_2$ to help seek the distortion region and we denote it as $\hat{S}_{12}$. We define $D_2(D_1)$ as the minimum achievable distortion in estimating $S_2$ at receiver 1 when we achieve a distortion $D_1$ in estimating $S_1$. Therefore, at receiver 1, we have either $S_1 \leftrightarrow \hat{S}_1 \leftrightarrow \hat{S}_{12} \leftrightarrow S_2$ form a Markov chain or $\hat{S}_1 = a\hat{S}_{12}$ for some constant $a$. We are going to show the distortion regions for the two cases separately.

### 4.1.1 Inner Bound when $S_1 \leftrightarrow \hat{S}_1 \leftrightarrow \hat{S}_{12} \leftrightarrow S_2$

Our coding scheme is shown in Figure 4.2. The details are as follows:

We send $X^n = X_a^n + X_d^n + X_{S_3}^n$ over the channel, and the corresponding power for $X_a, X_d$ and $X_{S_3}$ are $P_a, P_d$ and $P_{S_3}$. In addition, we define $P_{S_1S_2} = P_a + P_d$. The coding scheme for $S_1$ and $S_2$ is the same as that in Section 3.2. The only difference lies in the encoding of $S_3$. Here we first encode $S_3^n$ using the Wyner-Ziv coding approach into $b_3S_3^n + U_3^n$ treating $V^n$ and $Y_3^n$ as side information at rate of $R_3 = I(S_3; b_3S_3 + U_3|Y_3, V)$ and then we encode $b_3S_3^n + U_3^n$ using a conventional channel code into $X_{S_3}^n$ at the same rate $R_3$ and send it over the channel. Besides, we require $R_3 \leq I(X_{S_3}; Y_3)$ to ensure channel decoding

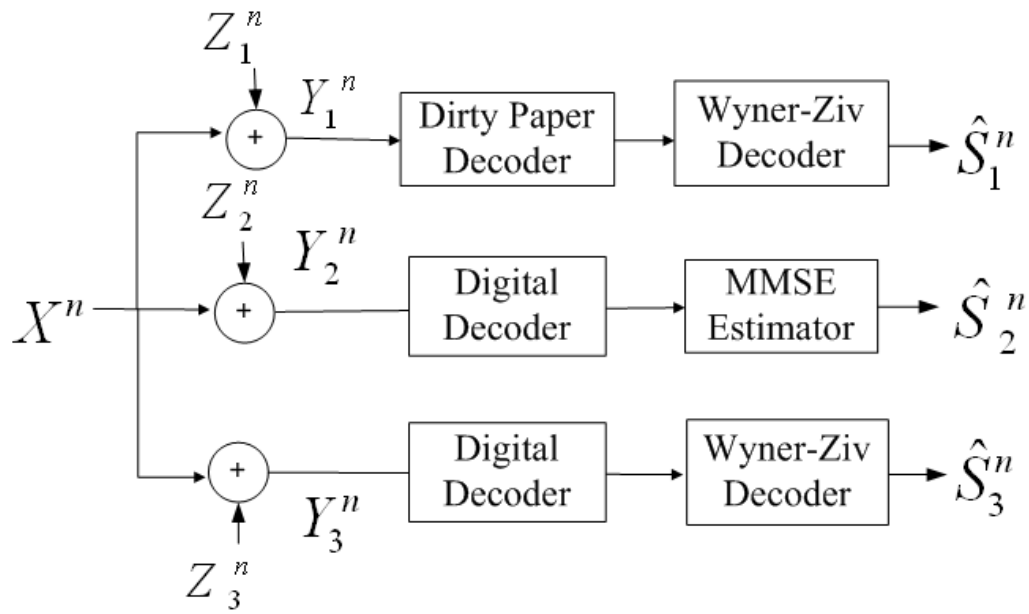


Figure 4.3: Broadcasting Three Gaussian Source Components over AWGN-BC with Side Information at Receiver: the Decoder Part

and Wyner-Ziv decoding is successful. Since AWGN-BC is stochastically degraded, we can also ensure that receivers 1 and 2 can successfully decode $X_{S_3}^n$.

The decoding procedure is shown in Figure 4.3. For the decoding part about $S_1$ and $S_2$ at receivers 1 and 2, we first do channel decoding to subtract $X_{S_3}$, then the rest procedure and distortion result is the same as earlier results in Section 3.2.1. For $D_1$, we have

$$\frac{1}{2}\log\frac{(1-\rho^2)\sigma^2}{D_{1|2}} = \frac{1}{2}\log\frac{\alpha^2 a_1^2(1-\rho^2)\sigma^2 + P_d + N_1}{N_1}. \tag{4.1}$$

Since $S_1 \leftrightarrow \hat{S}_1 \leftrightarrow \hat{S}_{12} \leftrightarrow S_2$ form a Markov chain, it follows that $D_{1|2} = D_1$.

For $D_2$, we have

$$\frac{1}{2}\log\frac{\sigma^2}{D_2} = \frac{1}{2}\log\frac{P_a + P_d + N_2}{\alpha^2 a_1^2(1-\rho^2)\sigma^2 + P_d + N_2}. \tag{4.2}$$

For $S_3$, at receiver 3, $X_{S_3}$ is firstly decoded and then we can get $b_3S_3 + U_3$. At the receiver side, we have

$$\begin{aligned}
\frac{1}{2}\log\frac{\sigma^2}{D_3} &= I(S_3; b_3S_3 + U_3, X_a + X_d + Z_3, V) \\
&= I(S_3; X_a + X_d + Z_3, V) + I(S_3; b_3S_3 + U_3 | X_a + X_d + Z_3, V) \\
&= I(S_3; X_a + X_d + Z_3, V) + I(X_{S_3}; Y_3) \\
&= I(S_3; V) + I(S_3; X_a + X_d + Z_3 | V) + I(X_{S_3}; Y_3) \\
&= I(S_3; V) + I(S_3; X_a + X_d + Z_3 | V) + I(X_{S_3}; Y_3) \\
&= \frac{1}{2}\log\frac{\sigma^2}{\frac{\sigma^2 Q}{\rho_0^2\sigma^2+Q}} + I(S_3; X_a + X_d + Z_3 | V) + I(X_{S_3}; Y_3) \\
&= \frac{1}{2}\log\frac{\sigma^2}{\frac{\sigma^2 Q}{\rho_0^2\sigma^2+Q}} + I(X_{S_3}; Y_3) \\
&= \frac{1}{2}\log\frac{\sigma^2}{\frac{\sigma^2 Q}{\rho_0^2\sigma^2+Q}} + h(Y_3) - h(Y_3 | X_{S_3}) \\
&= \frac{1}{2}\log\frac{\sigma^2}{\frac{\sigma^2 Q}{\rho_0^2\sigma^2+Q}} + \frac{1}{2}\log\frac{P + N_3}{P_a + P_d + N_3}.
\end{aligned}$$

Rearranging the equation, we could get

$$\frac{1}{2}\log\frac{\frac{\sigma^2 Q}{\rho_0^2\sigma^2+Q}}{D_3} = \frac{1}{2}\log\frac{P + N_3}{P_a + P_d + N_3}. \tag{4.3}$$

To sum up, (4.1), (4.2) and (4.3) give an inner bound of the achievable distortion region.

### 4.1.2 Inner Bound when $\hat{S}_1 = a\hat{S}_{12}$

Here we set $P_d = 0$ and everything else is the same as the coding scheme ins Section 4.1.1. For $S_1$ and $S_2$, we are only going to keep the $X_a$ part. $X_a^n = \alpha(a_1S_1^n + a_2S_2^n)$, where

$\alpha = \sqrt{\frac{P_a}{Var(\sum_{i=1}^{2} a_i S_i)}}$ and the power of the analog part is $P_a$ ($P_a + P_{S_3} = P$). Then we transmit $X^n = X_a^n + X_{S_3}^n$ over the three user AWGN-BC.

At the first and second receiver, first find a unique $X_{S_3}^n$ codeword that is jointly typical with $Y_1^n$ and $Y_2^n$, and then the decoder can remove the digital part $X_{S_3}^n$ and do estimation based on the analog part. For $D_1$, we have

$$\frac{1}{2}\log\frac{\sigma^2}{D_1} = \frac{1}{2}\log\frac{P_a + N_1}{\alpha^2 a_2^2(1-\rho^2)\sigma^2 + N_1}. \tag{4.4}$$

For $D_2$, we have

$$\frac{1}{2}\log\frac{\sigma^2}{D_2} = \frac{1}{2}\log\frac{P_a + N_2}{\alpha^2 a_1^2(1-\rho^2)\sigma^2 + N_2}. \tag{4.5}$$

For $D_3$, at receiver 3, after channel decoding and Wyner-Ziv decoding, we get $b_3 S_3 + U_3$.

At the receiver side,

$$\begin{aligned}
\frac{1}{2}\log\frac{\sigma^2}{D_3} &= I(S_3; b_3S_3 + U_3, X_a + Z_3, V) \\
&= I(S_3; X_a + Z_3, V) + I(S_3; b_3S_3 + U_3 | X_a + Z_3, V) \\
&= I(S_3; X_a + Z_3, V) + I(X_{S_3}; Y_3) \\
&= I(S_3; V) + I(S_3; X_a + Z_3 | V) + I(X_{S_3}; Y_3) \\
&= I(S_3; V) + I(S_3; X_a + Z_3 | V) + I(X_{S_3}; Y_3) \\
&= \frac{1}{2}\log\frac{\sigma^2}{\frac{\sigma^2 Q}{\rho_0^2\sigma^2+Q}} + I(S_3; X_a + Z_3 | V) + I(X_{S_3}; Y_3) \\
&= \frac{1}{2}\log\frac{\sigma^2}{\frac{\sigma^2 Q}{\rho_0^2\sigma^2+Q}} + I(X_{S_3}; Y_3) \\
&= \frac{1}{2}\log\frac{\sigma^2}{\frac{\sigma^2 Q}{\rho_0^2\sigma^2+Q}} + h(Y_3) - h(Y_3 | X_{S_3}) \\
&= \frac{1}{2}\log\frac{\sigma^2}{\frac{\sigma^2 Q}{\rho_0^2\sigma^2+Q}} + \frac{1}{2}\log\frac{P + N_3}{P_a + N_3}.
\end{aligned}$$

Rearrange the equation, we could get

$$\frac{1}{2}\log\frac{\frac{\sigma^2 Q}{\rho_0^2\sigma^2+Q}}{D_3} = \frac{1}{2}\log\frac{P + N_3}{P_a + N_3}. \tag{4.6}$$

To sum up, (4.4), (4.5) and (4.6) provide an inner bound of the achievable distortion region $(D_1, D_2, D_3)$.

### 4.1.3 Outer Bound

Here we shall use an genie-aided argument and the diagram is shown in Figure 4.4. At receiver side, $V^n, S_2^n, S_3^n$ are provided for receiver 1, $V^n, S_3^n$ are provided for receiver 2.

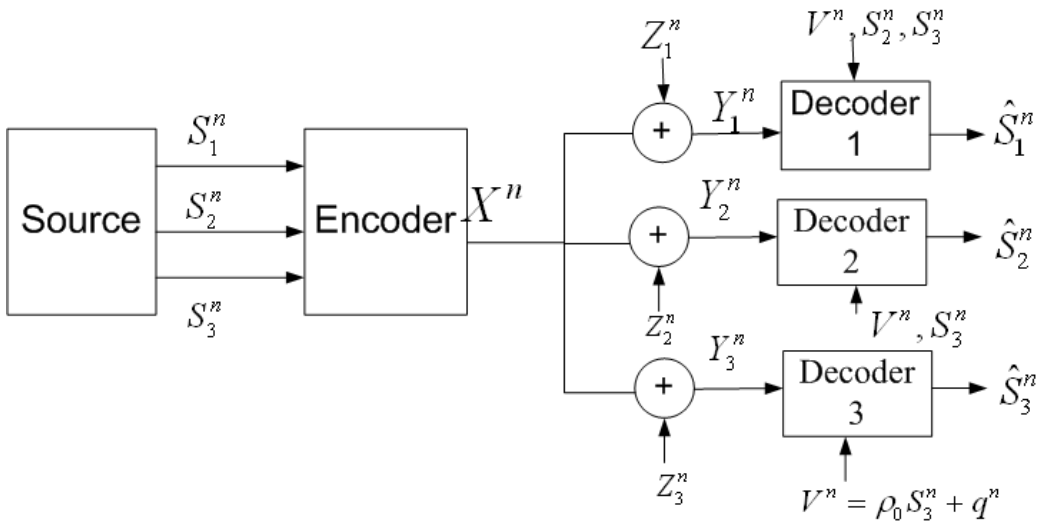


Figure 4.4: Broadcasting Three Gaussian Source Components over AWGN-BC with Genie-aided receiver with Side Information at Receiver

So the only difference between the current genie-aided outer bound and the earlier one lies in $V^n$'s presence at receivers 1 and 2.

**Lemma 4.1**: The distortion region of broadcasting correlated Gaussian source components is bounded by:

$$\frac{n}{2}\log\frac{\sigma^2(1-\rho^2)}{D_{1|2,3,V}} \leq \frac{n}{2}\log(\frac{\alpha_1 P + N_1}{N_1}),$$

$$\frac{n}{2}\log\frac{\sigma^2}{D_{2|3,V}} \leq \frac{n}{2}\log(\frac{(\alpha_1+\alpha_2)P + N_2}{\alpha_1 P + N_2}),$$

$$\frac{n}{2}\log\frac{\frac{\sigma^2 Q}{\rho_0^2\sigma^2+Q}}{D_{3|V}} \leq \frac{n}{2}\log(\frac{P+N_3}{(\alpha_1+\alpha_2)P+N_3}).$$

**Proof**: Here a brief proof of the outer bound is provided below:

For $S_1^n$, we have

$$\begin{aligned}\frac{n}{2}\log\frac{\sigma^2(1-\rho^2)}{D_{1|2,3,V}} &= I(S_1^n;\hat{S}_1^n|S_2^n,S_3^n,V^n)\\ &\leq I(S_1^n;Y_1^n|S_2^n,S_3^n,V^n)\\ &= h(Y_1^n|S_2^n,S_3^n,V^n)-h(Y_1^n|S_1^n,S_2^n,S_3^n,V^n)\\ &= h(Y_1^n|S_2^n,S_3^n,V^n)-h(Z_1^n)\\ &= \frac{n}{2}\log(\frac{\alpha_1 P+N_1}{N_1}). \end{aligned} \tag{4.7}$$

where $D_{1|2,3,V}$ denotes the distortion when $V^n, S_2^n, S_3^n$ is presented at receiver 1 and $\alpha_1 \in [0,1]$.

For $S_2^n$, we have

$$\begin{aligned}\frac{n}{2}\log\frac{\sigma^2}{D_{2|3,V}} &= I(S_2^n;\hat{S}_2^n|S_3^n,V^n)\\ &\leq I(S_2^n;Y_2^n|S_3^n,V^n)\\ &= h(Y_2^n|S_3^n,V^n)-h(Y_2^n|S_2^n,S_3^n,V^n)\\ &= \frac{n}{2}\log(\frac{(\alpha_1+\alpha_2)P+N_2}{\alpha_1 P+N_2}). \end{aligned} \tag{4.8}$$

where $D_{2|3,V}$ denotes the distortion when $V^n, S_3^n$ is presented at receiver 2 and $\alpha_2 \in [0,1]$.

For $S_3^n$, we have

$$\begin{aligned}\frac{n}{2}\log\frac{\frac{\sigma^2 Q}{\rho_0^2\sigma^2+Q}}{D_{3|V}} &= I(S_3^n;\hat{S}_3^n|V^n)\\ &\leq I(S_3^n;Y_3^n|V^n)\\ &= h(Y_3^n|V^n)-h(Y_3^n|S_3^n,V^n)\\ &\leq h(Y_3^n)-h(Y_3^n|S_3^n,V^n)\\ &= \frac{n}{2}\log(\frac{P+N_3}{(\alpha_1+\alpha_2)P+N_3}),\end{aligned} \tag{4.9}$$

where $D_{3|V}$ denotes the distortion at receiver 3.

To sum up, (4.7), (4.8) and (4.9) give a genie-aided outer bound of the achievable distortion region.

In the following part, we will provide a lower bound of $D_2$ in terms of a fixed $D_1$. Here the proof is very similar to the one in Section 3.2.3 and we directly give the result here. An upper bound on $D_{1|2}$:

$$D_{1|2} \leq \sigma^2 + (\mu_1^2 - 2\mu_1)(\sigma^2 - D_1) + \mu_2^2\sigma^2 - 2\mu_2\rho\sigma^2 + 2\mu_1\mu_2\sqrt{(\sigma^2 - D_1)(\sigma^2 - D_2(D_1))}. \tag{4.10}$$

Moreover, by combining the genie-aided outer bound derived for $D_{1|2,3,V}$ and $D_{2|3,V}$, we could get a lower bound on $D_2$ in terms of $D_{1|2}$, i.e.,

$$D_2 \geq \frac{\sigma^2}{(\alpha_1+\alpha_2)P+N_2}(\frac{\sigma^2(1-\rho^2)N_1}{D_{1|2}} + N_2 - N_1). \tag{4.11}$$

By combining (4.10) and (4.11) together, we could get a lower bound on $D_2$ for any

achievable $D_1$ when $\hat{S}_1 = a\hat{S}_{12}$, which determines the tradeoff between $D_1$ and $D_2$.

### 4.1.4 Achievable Distortion Region when $S_1 \leftrightarrow \hat{S}_1 \leftrightarrow \hat{S}_{12} \leftrightarrow S_2$

If we let $\alpha^2 a_1^2(1-\rho^2)\sigma^2 + P_d = \alpha_1 P$ and $P_a + P_d = (\alpha_1 + \alpha_2)P$ in the inner bound, then we can see that the inner bound meets the genie-aided outer bound.

### 4.1.5 Achievable Distortion Region when $\hat{S}_1 = a\hat{S}_{12}$

First of all, for $S_3^n$, we can easily see that the inner bound meets the outer bound if we set $P_a = (\alpha_1 + \alpha_2)P$. Besides, the distortion tradeoff between $D_1$, $D_2$ and $D_3$ depends on the power allocation, i.e., the value choice of $P_a$ and $P_{S_3}$. Second, we have shown the distortion tradeoff between $D_1$ and $D_2$ in the outer bound part. Since $S_1$, $\hat{S}_1$, and $S_2$ are jointly Gaussian, we can see that all the inequalities in the genie-aided outer bound and the outer bound in the above section become equalities. In other words, the inner bound meets the outer bound for $S_1$ and $S_2$.

To sum up, we have shown that the analog coding scheme achieve the distortion region when $\hat{S}_1 = a\hat{S}_{12}$.

### 4.1.6 Summary

So far, we have shown inner and outer bounds for two regions, one for the case where $S_1 \leftrightarrow \hat{S}_1 \leftrightarrow \hat{S}_{12} \leftrightarrow S_2$ form a Markov chain and the other for the case where $\hat{S}_1 = a\hat{S}_{12}$. In addition, for both scenarios, we have shown that the inner bound meets the outer bound.

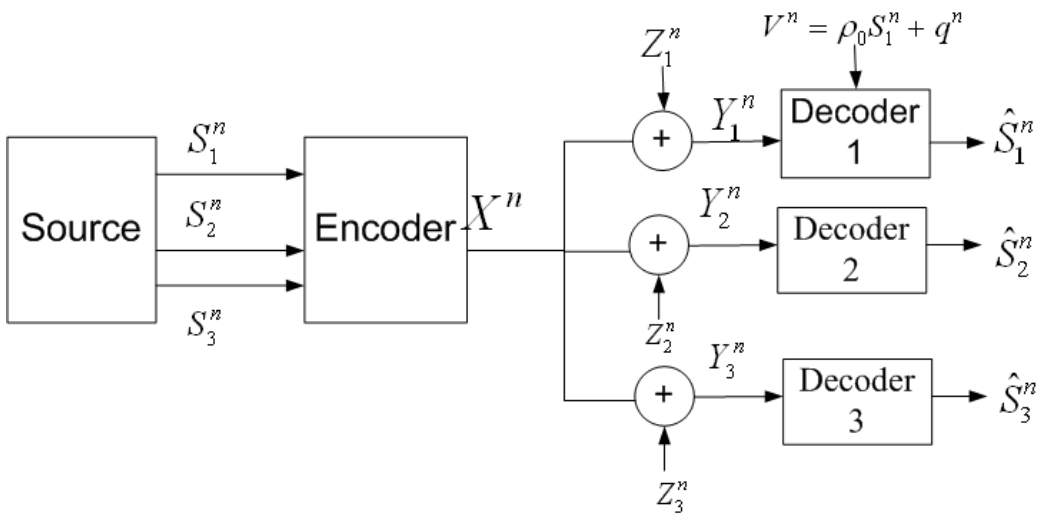


Figure 4.5: Broadcasting Three Gaussian Source Components over AWGN-BC with Side Information at Receiver when last two are correlated

## 4.2 First Component with Side Information at Receiver

Here, the problem setup is similar to the one in Section 4.1, which is shown in Figure 4.5. The only difference is that side information is provided for the first source component.

The covariance matrix of the correlated sources is as follows:

$$\Sigma_S = \begin{pmatrix} \sigma^2 & 0 & 0 \\ 0 & \sigma^2 & \rho\sigma^2 \\ 0 & \rho\sigma^2 & \sigma^2 \end{pmatrix}.$$

The three source components are jointly Gaussian and the last two components are correlated with each other and they are independent of the first one.

Since side information $V^n = \rho_0 S_1^n + q^n$ is present at receiver 1, where $q \sim N(0, Q)$ is a Gaussian random variable and is independent of everything else. Following the arguments in Section 4.1, we only consider the case when $D_1 \leq D_{1max} = \frac{\sigma^2 Q}{\rho_0^2 \sigma^2 + Q}$.

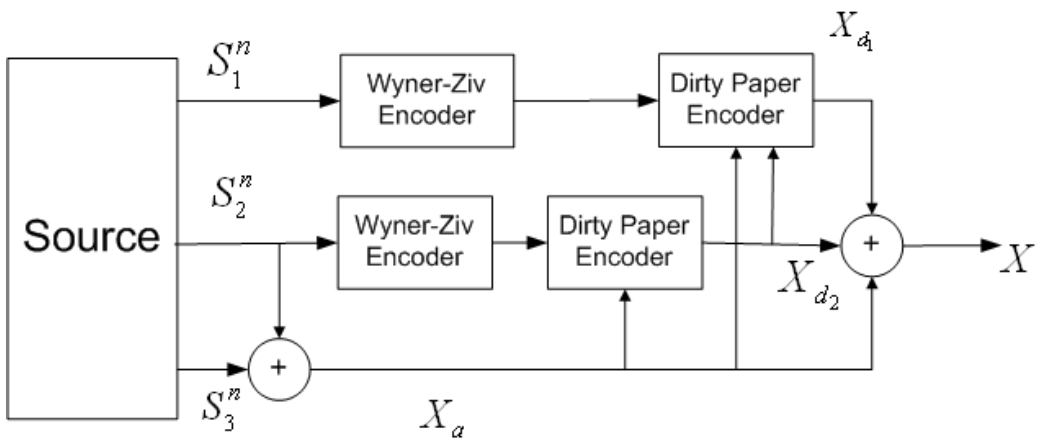


Figure 4.6: Broadcasting Three Gaussian Source Components over AWGN-BC with Side Information at Receiver: the Encoder Part

Note that at receiver 2, apart from reconstructing $S_2$, we also reconstruct $S_3$ and we denote the reconstruction as $\hat{S}_{23}$. $D_3(D_2)$ is defined the same as in Section 3.3. Therefore, at receiver 2, we have either $S_2 \leftrightarrow \hat{S}_2 \leftrightarrow \hat{S}_{23} \leftrightarrow S_3$ form a Markov chain or $\hat{S}_2 = a\hat{S}_{23}$ for some constant $a$. We shall establish the distortion regions for the two cases separately.

### 4.2.1 Inner Bound when $S_2 \leftrightarrow \hat{S}_2 \leftrightarrow \hat{S}_{23} \leftrightarrow S_3$

Our coding scheme for the problem is illustrated in Figure 4.6.

$X^n = X_a^n + X_{d_1}^n + X_{d_2}^n$ is transmitted over the channel, and the corresponding power for $X_a, X_{d_1}$ and $X_{d_2}$ are $P_a, P_{d_1}$ and $P_{d_2}$. The coding scheme for $S_2$ and $S_3$ is the same as that in Section 3.3. The only difference lies in the encoding of $S_1$. Here we first encode $S_1^n$ using the Wyner-Ziv coding approach into $b_1 S_1^n + U_1^n$ treating $V^n$ and $Y_1^n$ as side information at rate of $R_1 = I(S_1; b_1 S_1 + U_1 | Y_1, V)$. Then we encode the $2^{nR_1}$ Wyner-Ziv coding index using a dirty paper coding encoder of the same rate while treating $X_a^n$ and $X_{d_2}^n$ as channel state. We denote the auxiliary random variable as $T_1^n = X_{d_1}^n + \gamma_1(X_a^n + X_{d_2}^n)$, where $\gamma_1 = \frac{P_{d_1}}{P_{d_1}+N_1}$ and then we transmit $X_{d_1}^n = T_1^n - \gamma_1(X_a^n + X_{d_2}^n)$.

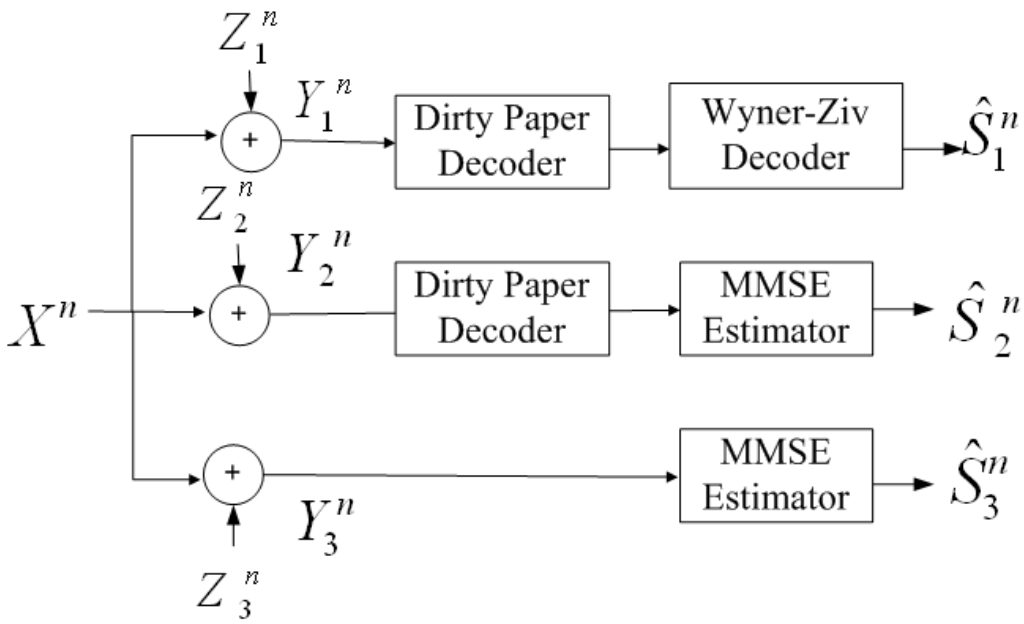


Figure 4.7: Broadcasting Three Gaussian Source Components over AWGN-BC with Side Information at Receiver: the Decoder Part

The decoding procedure and distortion result for $D_2$ and $D_3$ is the same as the earlier results in Section 3.3.1. For $D_3$, we have

$$\frac{1}{2}\log\frac{\sigma^2}{D_3} = \frac{1}{2}\log\frac{P+N_3}{\alpha^2 a_2^2(1-\rho^2)\sigma^2 + P_{d_1} + P_{d_2} + N_3}. \tag{4.12}$$

For $D_2$, we have

$$\frac{1}{2}\log\frac{(1-\rho^2)\sigma^2}{D_{2|3}} = \frac{1}{2}\log\frac{\alpha^2 a_2^2(1-\rho^2)\sigma^2 + P_{d_1} + P_{d_2} + N_2}{P_{d_1} + N_2}. \tag{4.13}$$

Since $S_2 \leftrightarrow \hat{S}_2 \leftrightarrow \hat{S}_{23} \leftrightarrow S_3$ form a Markov chain here, and then it is also true that $S_2 \leftrightarrow (Y_2, b_2 S_2 + U_2) \leftrightarrow S_3$ form a Markov chain, it follows that $D_{2|3} = D_2$.

For $S_1$, similar to the approach in Section 3.3.1 and 4.1.1, we could get

$$\frac{1}{2}\log\frac{\frac{\sigma^2 Q}{\rho_0^2\sigma^2+Q}}{D_1} = \frac{1}{2}\log\frac{P_{d_1}+N_1}{N_1}. \tag{4.14}$$

It is clear that (4.12),(4.13) and (4.14) provide an inner bound of the distortion region.

### 4.2.2 Inner Bound when $\hat{S}_2 = a\hat{S}_{23}$

Here we set $P_{d_2} = 0$ and everything else is the same as Section 4.2.1. We transmit $X^n = X_a^n + X_{d_1}^n$ over the three-user AWGN-BC.

At the second and third receiver, we do MMSE estimation to reconstruct $S_2$ and $S_3$. For $D_2$, we have

$$\frac{1}{2}\log\frac{\sigma^2}{D_2} = \frac{1}{2}\log\frac{P+N_2}{\alpha^2 a_3^2(1-\rho^2)\sigma^2+N_2}. \tag{4.15}$$

For $D_3$, we have

$$\frac{1}{2}\log\frac{\sigma^2}{D_3} = \frac{1}{2}\log\frac{P+N_3}{\alpha^2 a_2^2(1-\rho^2)\sigma^2+N_3}. \tag{4.16}$$

For $S_1$, similar to the approach in Sections 3.3.1 and 4.1.1, we could get

$$\frac{1}{2}\log\frac{\frac{\sigma^2 Q}{\rho_0^2\sigma^2+Q}}{D_1} = \frac{1}{2}\log\frac{P_{d_1}+N_1}{N_1}. \tag{4.17}$$

The inner bound of the distortion region is given through (4.15),(4.16) and (4.17).

### 4.2.3 Outer Bound

Here we shall use a genie-aided argument. The proof is similar to that in Section 4.1.3 and we state the result without proof.

**Lemma 4.2**: The distortion region of broadcasting correlated Gaussian source components is bounded by:

$$\frac{n}{2}\log\frac{\frac{\sigma^2 Q}{\rho_0^2\sigma^2+Q}}{D_{1|2,3,V}} \leq \frac{n}{2}\log(\frac{\alpha_1 P + N_1}{N_1}), \tag{4.18}$$

$$\frac{n}{2}\log\frac{\sigma^2(1-\rho^2)}{D_{2|3,V}} \leq \frac{n}{2}\log(\frac{(\alpha_1+\alpha_2)P + N_2}{\alpha_1 P + N_2}), \tag{4.19}$$

$$\frac{n}{2}\log\frac{\sigma^2}{D_{3|V}} \leq \frac{n}{2}\log(\frac{P + N_3}{(\alpha_1+\alpha_2)P + N_3}). \tag{4.20}$$

Similar to the earlier argument, we could get

$$D_{2|3} \leq \sigma^2 + (\mu_1^2 - 2\mu_1)(\sigma^2 - D_2) + \mu_2^2\sigma^2 - 2\mu_2\rho\sigma^2 + 2\mu_1\mu_2\sqrt{(\sigma^2 - D_2)(\sigma^2 - D_3(D_2))}. \tag{4.21}$$

Moreover, by combining the genie-aided outer bound derived for $D_{2|3,V}$ and $D_{3|V}$, we could get a lower bound on $D_3$ in terms of $D_{2|3}$, i.e.,

$$D_3 \geq \frac{\sigma^2}{(1-\alpha_1)P + N_3}(\frac{\sigma^2(1-\rho^2)N_2}{D_{2|3}} + N_3 - N_2). \tag{4.22}$$

By combining (4.21) and (4.22) together, we could get a lower bound for $D_3$ for any

achievable $D_2$ when $\hat{S}_2 = a\hat{S}_{23}$, which specifies the tradeoff between $D_2$ and $D_3$. So far, we have given a lower bound for $D_1$ and $D_3$ in terms of fixed $D_2$.

### 4.2.4 Achievable Distortion Region when $S_2 \leftrightarrow \hat{S}_2 \leftrightarrow \hat{S}_{23} \leftrightarrow S_3$

If we let $P_{d_1} = \alpha_1 P$ and $\alpha^2 a_2^2(1-\rho^2)\sigma^2 + P_{d_1} + P_{d_2} = (\alpha_1 + \alpha_2)P$ in the inner bound, then we can see that the inner bound meets the genie-aided outer bound. So the distortion region is determined.

### 4.2.5 Achievable Distortion Region when $\hat{S}_2 = a\hat{S}_{23}$

First of all, for $S_1^n$, we can easily see that the inner bound can meet the outer bound if we set $P_{d_1} = \alpha_1 P$. Besides, the distortion tradeoff between $D_1$, $D_2$ and $D_3$ depends on the power allocation, i.e., the value choice of $P_a$ and $P_{d_1}$. Second, the distortion tradeoff between $D_2$ and $D_3$ is given in the outer bound part. Since $S_2$, $\hat{S}_2$, and $S_3$ are jointly Gaussian, we can see that the inner bound meets the outer bound for $S_2$ and $S_3$.

### 4.2.6 Summary

So far, we have established inner and outer bounds for two regions, one when $S_2 \leftrightarrow \hat{S}_2 \leftrightarrow \hat{S}_{23} \leftrightarrow S_3$ form a Markov chain and the other when $\hat{S}_2 = a\hat{S}_{23}$. In addition, for both scenarios, we have shown that the inner bound meets the outer bound and determined the achievable distortion region.

# Chapter 5

# Conclusion and Future work

## 5.1 Conclusion

We have studied the problem of broadcasting correlated Gaussian source components and we have determined the distortion region for several problem setups:

First of all, the problem of sending $m$ independent Gaussian source components over an AWGN-BC is considered. In addition, this problem setup is intimately related to that of broadcasting correlated Gaussian source components over an AWGN-BC with genie-aided receivers. It is shown that the separate source-channel coding approach is optimal in this setup.

Second, we consider two new scenarios and find the achievable distortion regions. In both scenarios, we send three Gaussian source components to three receivers and each receiver is only interested in reconstructing one corresponding source component. The difference between the two scenarios is that for the first scenario, the first two source components are correlated and they are independent of the third one while for the second scenario, the last two source components are correlated and they are independent of the first one.

Finally, we have studied two cases where side information is presented at one receiver and we have two correlated Gaussian source components and they are independent of the third one. Hybrid digital-analog coding schemes are proposed and the resulting distortion region is shown to be optimal.

In this dissertation, we have shown that joint source channel coding are optimal in obtaining the distortion region bound of broadcasting correlated Gaussian sources. Moreover, hybrid analog-digital coding schemes are used to achieve the distortion region bound.

## 5.2 Future work

A complete characterization of the distortion region of broadcasting $m$ ($m \geq 3$) correlated Gaussian source components remains unknown. Besides, the bandwidth mismatch case is also an interesting area to look into.

# Bibliography


[1] C.E.Shannon, "A mathematical theory of communication," *Bell System Technical Journal*, vol. 27, pp. 379–423, 623–656, Jul.,Oct. 1948.

[2] S. I.Bross, A. Lapidoth, and S. Tiguely, "Broadcasting Correlated Gaussians," *IEEE Trans. Inf. Theory*, vol. 56, pp. 3057–3068, Jul. 2010.

[3] C. Tian, S. Diggavi, and S. Shamai, "The Achievable Distortion Region of Bivariate Gaussian Source on Gaussian Broadcast Channel," *IEEE Trans. Inf. Theory*, vol. 57, pp. 6419–6427, Oct. 2011.

[4] A. E. Gamal and Y.-H. Kim, *Network Information Theory*. UK: Cambridge University Press, 2011.

[5] R. Soundararajan and S. Vishwanath, "Hybrid coding for Gaussian broadcast channels with Gaussian sources," in *Proc. IEEE International Symposium on Information Theory*, Seoul, Korea, Jul. 2009, pp. 2790–2794.

[6] A. D. Wyner and J. Ziv, "The rate-distortion function for source coding with side information at the decoder," *IEEE Trans. Inf. Theory*, vol. 22, pp. 1–10, Jan. 1976.

[7] M. Costa, "Writing on dirty paper," *IEEE Trans. Inf. Theory*, vol. 29, pp. 439–441, Mar. 1983.

[8] J.-J. Xiao and Z.-Q. Luo, "The Achievable Distortion Region of Bivariate Gaussian Source on Gaussian Broadcast Channel," in *43rd Allerton Conference on Communication, Control, and Computing*, Monticello, IL, Sep. 2005, pp. 438–447.